# Crosstalk

**Tzong-Lin Wu, Ph.D.**
**Department of Electrical Engineering**
**National Taiwan University**

# Topics:

- Introduction
- Transmission lines equations for coupled lines
  - symmetrical lines and symmetrically driven
  - homogeneous medium
  - symmetrical lines in homogeneous medium
  - symmetrical lines and asymmetrical driven
- Qualitative description of crosstalk
  - Terminations
- Measurement of crosstalk parameters
- How crosstalk noise can be reduced

# Introduction

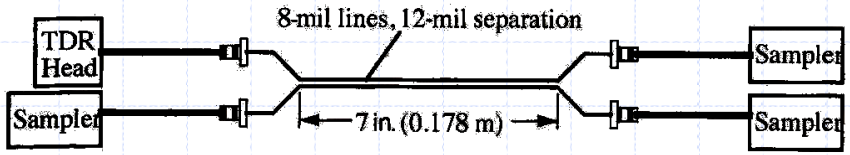


FIGURE 3-42 Cross-Talk Test Structure for Embedded Striplines

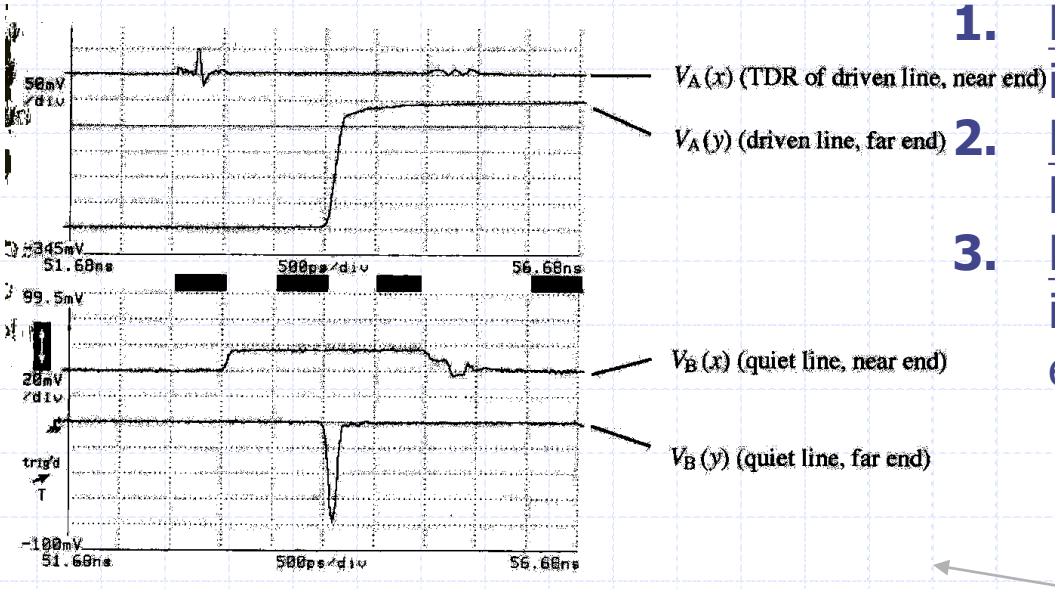


FIGURE 3-45 Cross-Talk Measurement in Coupled Microstrips

Three characteristics:

1. **Polarity of noise** at near end is opposite to that at the far end.
2. **Noise duration** at near end is larger than that at the far end.
3. **Noise magnitude** at near end is smaller than that at the far end.

# Introduction : Physical Geometry of Coupled Lines

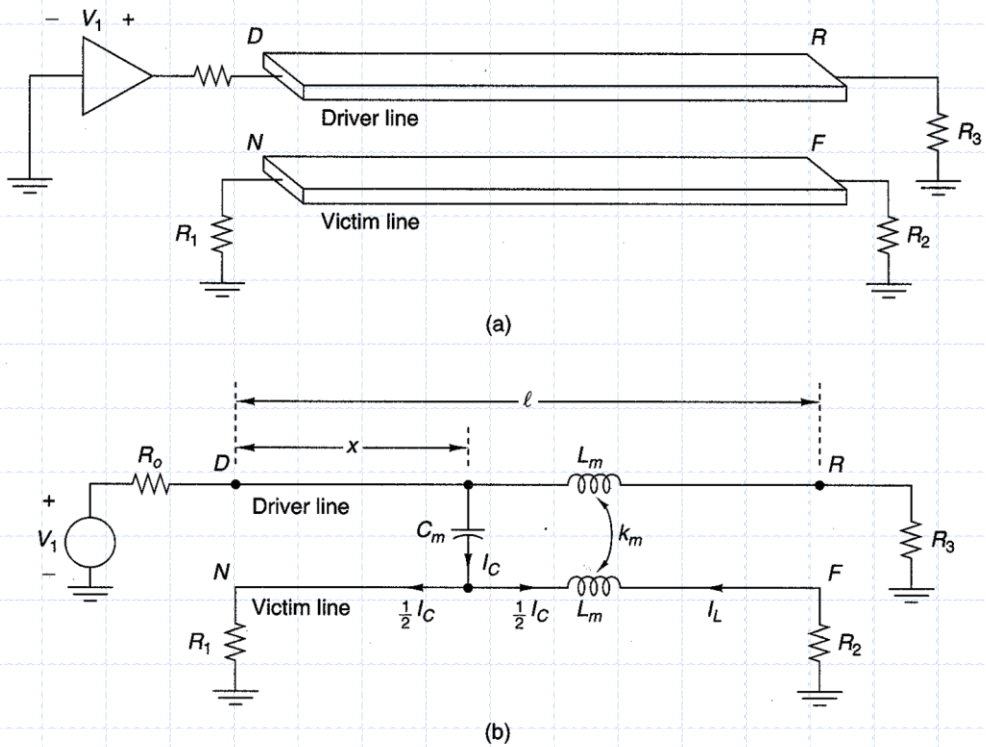


**Figure 7.9** Physical geometry of the coupled lines in part (a) has circuit representation (b).

Two kind of coupling:

1. Inductive coupling
2. Capacitive coupling

# Introduction: cross-talk mechanism of the inductive coupling

## Qualitative understanding of the coupling mechanism

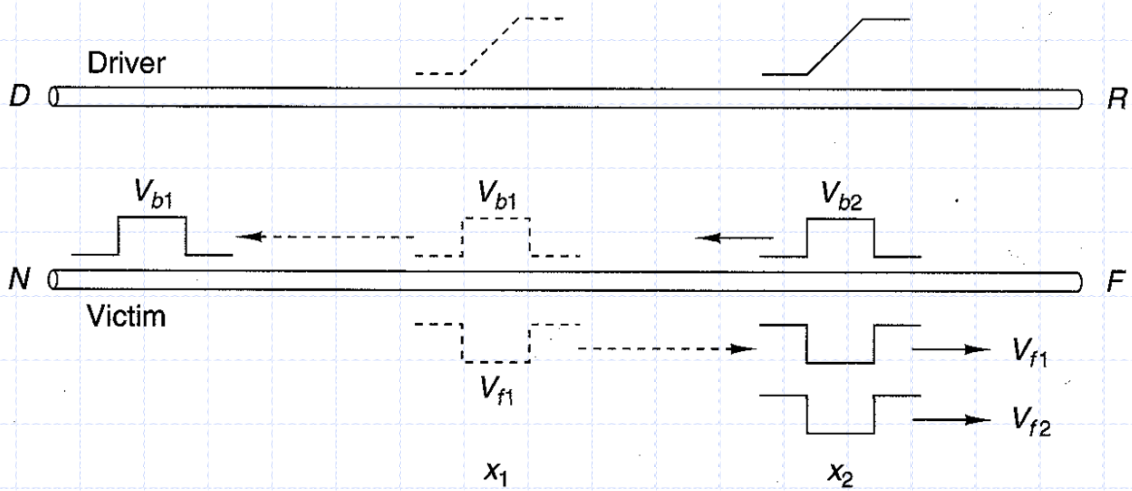


**Figure 7.10** Forward and backward traveling waves. The incremental pulses are shown dashed at $t = 0$ and solid at $t = \tau$.

- How about the cross-talk mechanism of the capacitive coupling ??

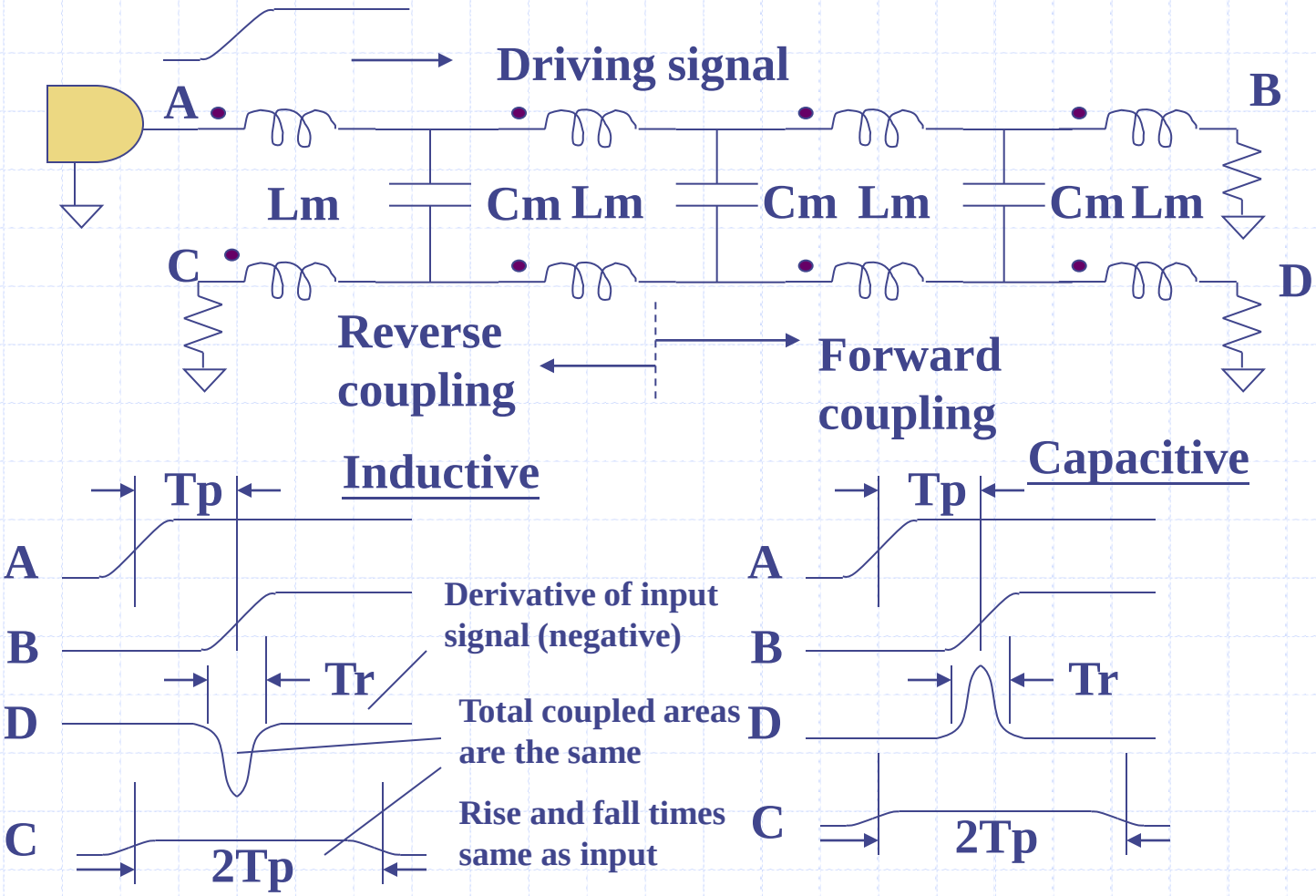
Driving signal
A
B
C
D
Lm
Cm
Lm
Cm
Lm
Cm
Lm
Reverse coupling
Forward coupling
Inductive
Capacitive
Tp
Tr
2Tp
Derivative of input signal (negative)
Total coupled areas are the same
Rise and fall times same as input

# Coupled lines equations

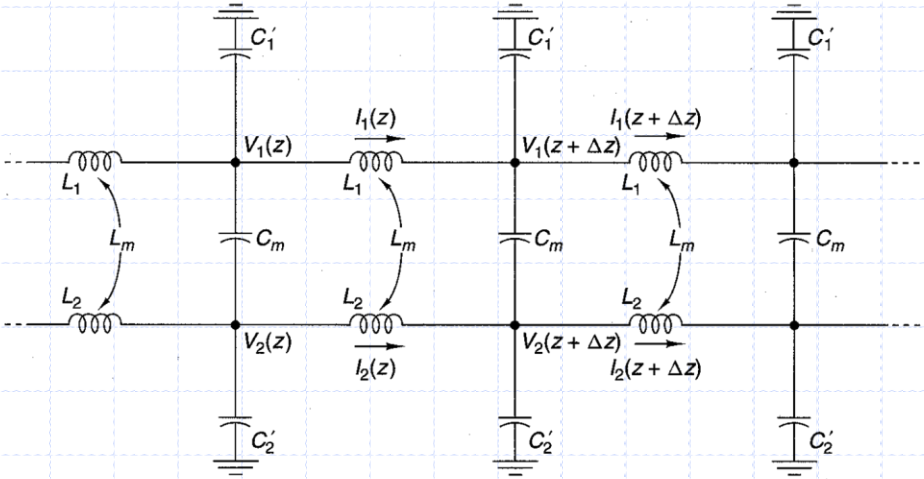


**Figure 7.1** Ladder network representing two coupled lines.

$$V_1(z) - V_1(z+\Delta z) = (L_1 \Delta z)\frac{\partial}{\partial t} I_1(z) + (L_m \Delta z)\frac{\partial}{\partial t} I_2(z)$$

$$I_1(z) - I_1(z+\Delta z) = C_1^{'}\frac{\partial}{\partial t} V_1(z+\Delta z) + C_m \frac{\partial}{\partial t}[V_1(z+\Delta z) - V_2(z+\Delta z)]$$

# Coupled lines equations

- Matrix forms

$$\frac{d\bar{V}(z)}{dz} = -\bar{L}\frac{\partial}{\partial t}\bar{I}(z)$$

$$\frac{d\bar{I}(z)}{dz} = -\bar{C}\frac{\partial}{\partial t}\bar{V}(z)$$

where

$$\bar{L} = \begin{bmatrix} l_{11} & l_{12} \\ l_{21} & l_{22} \end{bmatrix} = \begin{bmatrix} L_1 & L_m \\ L_m & L_2 \end{bmatrix}$$

$$\bar{C} = \begin{bmatrix} c_{11} & c_{21} \\ c_{12} & c_{22} \end{bmatrix} = \begin{bmatrix} C_1^{'} + C_m & -C_m \\ -C_m & C_2^{'} + C_m \end{bmatrix} = \begin{bmatrix} C_1 & -C_m \\ -C_m & C_2 \end{bmatrix}$$

**$L_{1,2}$** : self-inductance per unit length of line 1 and 2 when isolated
**$L_m$** : mutual inductance between line 1 and 2
**$C'_{1,2}$** : capacitance (to GND) of line 1 and 2 when isolated **
**$C_m$** : mutual capacitance between line 1 and 2

# Coupled lines equations

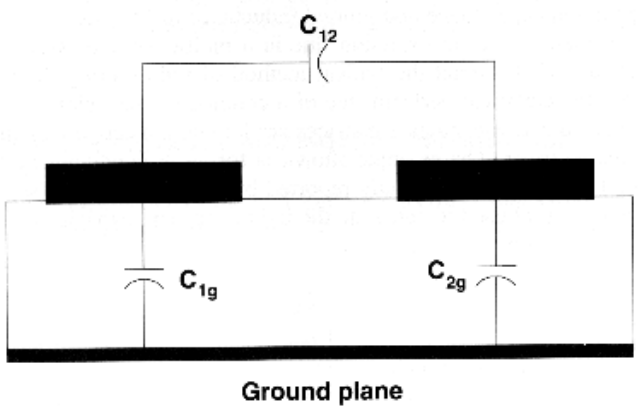


FIGURE 3.1 Simple two-conductor system used to explain the parasitic matrices.

$$\text{Capacitance matrix}=\begin{bmatrix} C_{11} & C_{12} \\ C_{21} & C_{22} \end{bmatrix}$$

$$C_{11} = C_{1g} + C_{12}$$

$$\text{inductance matrix}=\begin{bmatrix} L_{11} & L_{12} \\ L_{21} & L_{22} \end{bmatrix}$$

For multi-conductor coupled lines

$$\text{Capacitance matrix}=\begin{bmatrix} C_{11} & C_{12} & \cdots & C_{1N} \\ C_{21} & C_{22} & & \\ \vdots & & \ddots & \\ C_{N1} & & & C_{NN} \end{bmatrix}$$

$$\text{Inductance matrix}=\begin{bmatrix} L_{11} & L_{12} & \cdots & L_{1N} \\ L_{21} & L_{22} & & \\ \vdots & & \ddots & \\ L_{N1} & & & L_{NN} \end{bmatrix}$$

# Coupled lines equations

$$V_1(z) = V_{10} e^{j\omega t + \gamma z}$$
$$V_2(z) = V_{20} e^{j\omega t + \gamma z}$$
$$I_1(z) = I_{10} e^{j\omega t + \gamma z}$$
$$I_2(z) = I_{20} e^{j\omega t + \gamma z}$$

$\longrightarrow$

$$\gamma \bar{V}_0(z) = -j\omega \bar{L} \bar{I}_0(z)$$
$$\gamma \bar{I}_0(z) = -j\omega \bar{C} \bar{V}_0(z)$$

$\longrightarrow$

$$(\bar{A} + \frac{\gamma^2}{\omega^2}) \bar{V}_0 = 0$$

$\longrightarrow$

$$\bar{A} = \bar{L}\bar{C} = \begin{bmatrix} L_1 C_1 - L_m C_m & L_m C_2 - L_1 C_m \\ L_m C_1 - L_2 C_m & L_2 C_2 - L_m C_m \end{bmatrix}$$

$\longrightarrow$

$$\det(\bar{A} + \frac{\gamma^2}{\omega^2}) = 0$$ for nontrivial solutions

$\longrightarrow$ The γcan be solved with two possible solutions

# Symmetrical lines and symmetrical driven

Conditions:

- $L_1 = L_2$ (balanced lines)
  $C_1 = C_2$
- The balanced lines are driven by
  ***common mode*** or ***differential mode*** only

Characteristics:

- Propagation delay per-unit length:

$$\tau_{\pm} = \sqrt{(L_1 \pm L_m)(C_1 \mp C_m)}$$

- Characteristic impedance

$$Z_{0e} = \sqrt{\frac{L_1 + L_m}{C_1 - C_m}} = Z_1 \sqrt{\frac{1 + k_m}{1 - k_c}}$$

$$Z_{0o} = \sqrt{\frac{L_1 - L_m}{C_1 + C_m}} = Z_1 \sqrt{\frac{1 - k_m}{1 + k_c}}$$

where

$k_m = \frac{L_m}{L_1}$: magnetic coupling coefficient

$k_c = \frac{C_m}{C_1}$: capacitive coupling coefficient

# Symmetrical lines and symmetrical driven

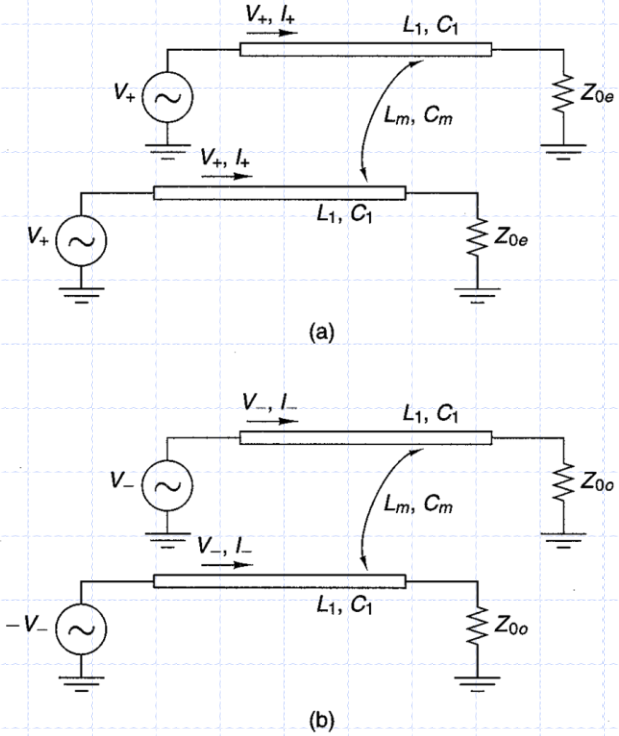


$$Z_{0e}, \tau_{+}$$

$$Z_{0o}, \tau_{-}$$

**Figure 7.3** (a) Even and (b) odd modes of propagation of two symmetrical lines.

# Symmetrical lines and symmetrical driven (Microstrip example)

***The Characteristic Impedance Matrix***

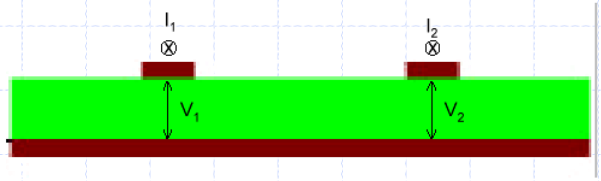


$$V_1 = Z_{11}I_1 + Z_{12}I_2$$

$$V_2 = Z_{22}I_2 + Z_{21}I_1$$

**Example:**
**Characteristic Impedance Matrix [ohms**

| | 1 | 2 |
|---|---|---|
| 1 | 49.6 | 6.4 |
| 2 | 6.4 | 49.6 |

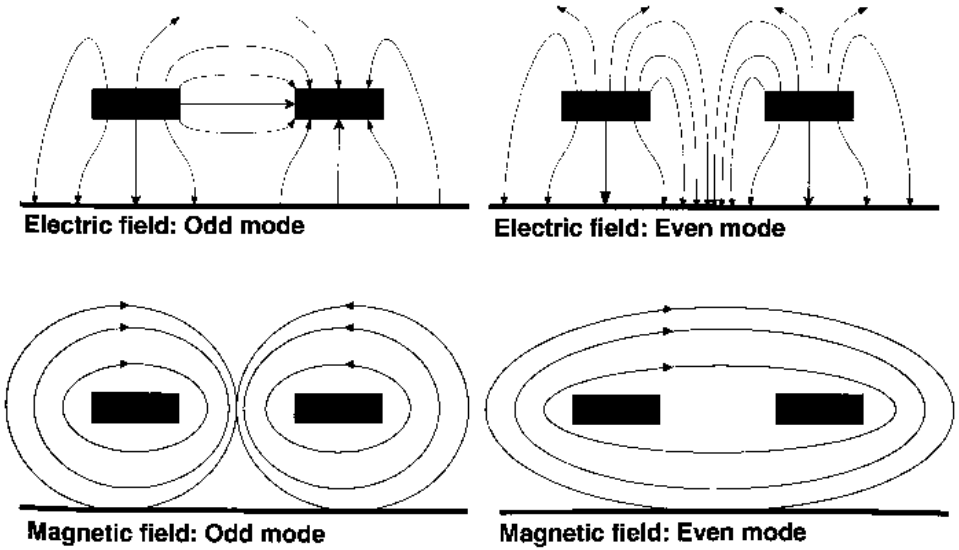


**FIGURE 3.10** Odd- and even-mode electric and magnetic field patterns for a simple two-conductor system.

## Symmetrical lines and symmetrical driven (another definition for even and odd mode)

### *Definition of Odd and Even Mode Impedance*

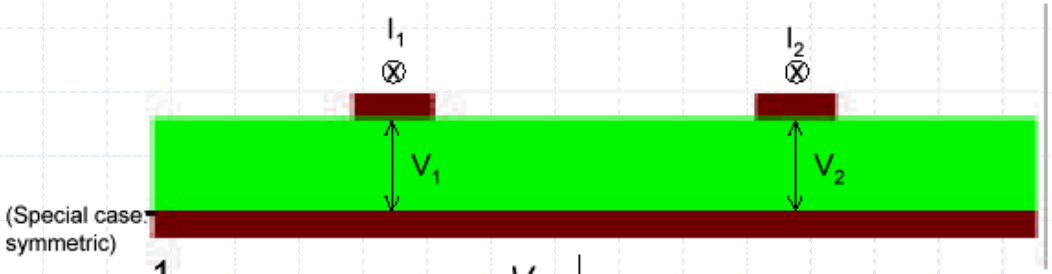


$$V_{odd} = \frac{1}{2}(V_1 - V_2) \qquad Z_{odd} = \left.\frac{V_{odd}}{I_1}\right|_{V_{even}=0} \qquad Z_{odd} = (Z_{11} - Z_{12})$$

$$V_{even} = \frac{1}{2}(V_1 + V_2) \qquad Z_{even} = \left.\frac{V_{even}}{I_1}\right|_{V_{odd}=0} \qquad Z_{even} = Z_{11} + Z_{12}$$

Coupling Factor = $20\log(Z_{12})$

$Z_{12} = (Ze - Zo)/(Ze + Zo)$

Note:

**$Z_{odd}$ is the impedance one line sees when the pair is driven in odd mode**
**Differential impedance is the impedance difference signal sees: = 2 x $Z_{odd}$**

# Physical concept for the even-mode and odd mode impedance

**Odd mode** $I_1 = -I_2$ and $V_1 = -V_2$

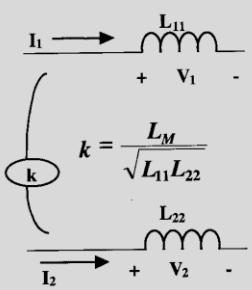


FIGURE 3.8 Simplified circuit for determining the equivalent odd-mode inductance.

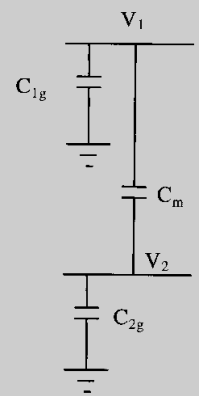


URE 3.9 Simplified circuit for determining the equivalent odd mode capacitance.

$$L_{odd} = L_{11} - L_m = L_{11} - L_{12}$$

$$C_{\text{odd}} = C_{1g} + 2C_m = C_{11} + C_m$$

$$Z_{\text{odd}} = \sqrt{\frac{L_{\text{odd}}}{C_{\text{odd}}}} = \sqrt{\frac{L_{11} - L_{12}}{C_{11} + C_{12}}}$$

$$\text{TD}_{\text{odd}} = \sqrt{L_{\text{odd}} C_{\text{odd}}} = \sqrt{(L_{11} - L_{12})(C_{11} + C_{12})}$$

# Physical concept for the even-mode and odd mode impedance

**Even mode** $I_1 = I_2$ and $V_1 = V_2$

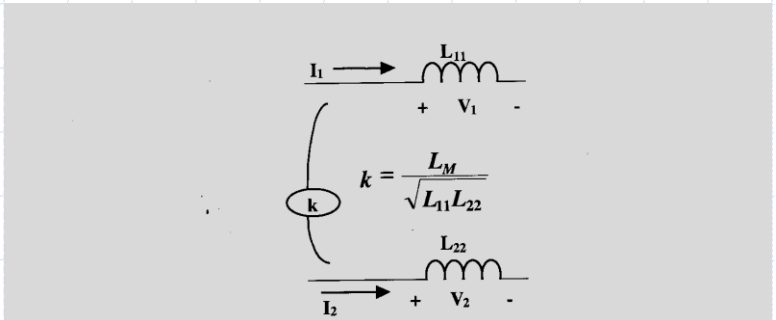


FIGURE 3.8 Simplified circuit for determining the equivalent odd-mode inductance.

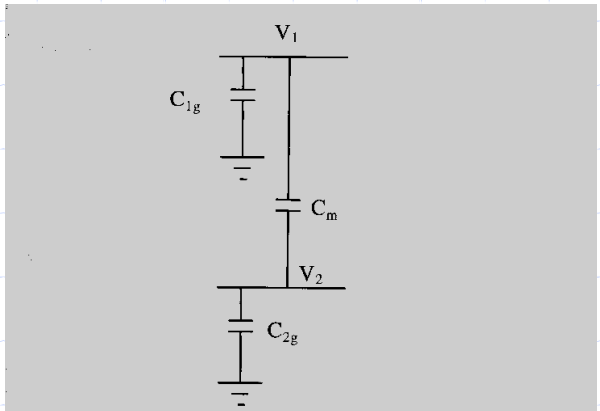


URE 3.9 Simplified circuit for determining the equivalent odd mode capacitance.

$$L_{\text{even}} = L_{11} + L_m$$

$$C_{\text{even}} = C_0 = C_{11} - C_m$$

$$Z_{\text{even}} = \sqrt{\frac{L_{\text{even}}}{C_{\text{even}}}} = \sqrt{\frac{L_{11} + L_{12}}{C_{11} - C_{12}}}$$

$$\text{TD}_{\text{odd}} = \sqrt{L_{\text{even}} C_{\text{even}}} = \sqrt{(L_{11} + L_{12})(C_{11} - C_{12})}$$

# Impedance trends for the even- and odd-modes

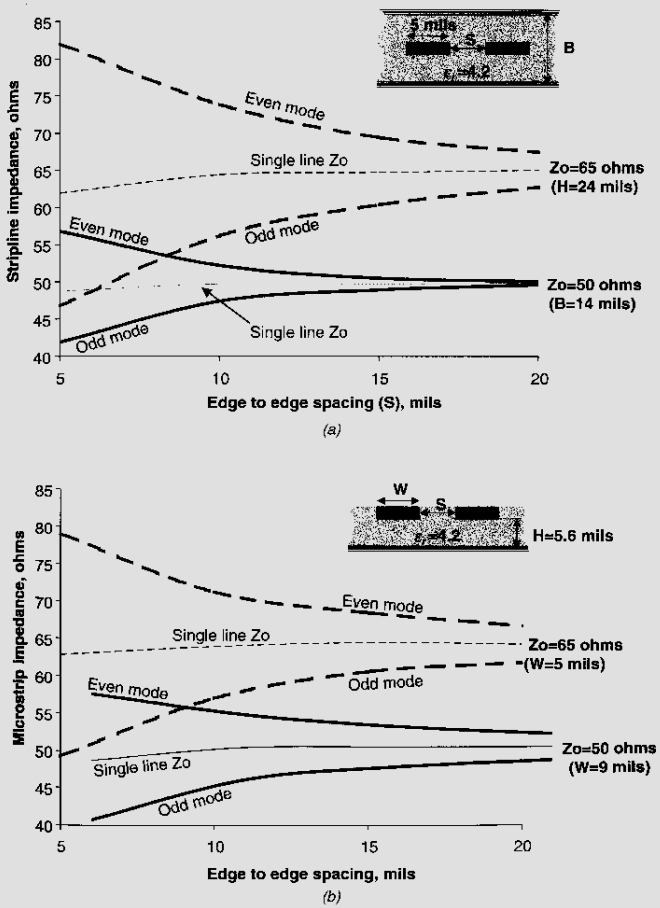


**FIGURE 3.13** Variations in impedance as a function of spacing: (*a*) typical stripline two conductor system; (*b*) typical microstrip two-conductor system.

What impedance behaviors do you see ?

## Impedance trends for the even- and odd-modes

1. High-impedance traces exhibit significantly more impedance variation than do the lower-impedance trace because the reference planes are much farther in relation to the signal spacing.
2. At smaller spacing, the single-line impedance is lower than the target. This is because the adjacent traces increase the self-capacitance of the trace and effectively lower its impedance even when they are not active.
3. Higher coupling the traces behave, the larger variation even- and odd- impedances will have.

# Mutual coupling trends for the microstrip and stripline

Mutual parasitic fall off exponentially with trace-trace spacing

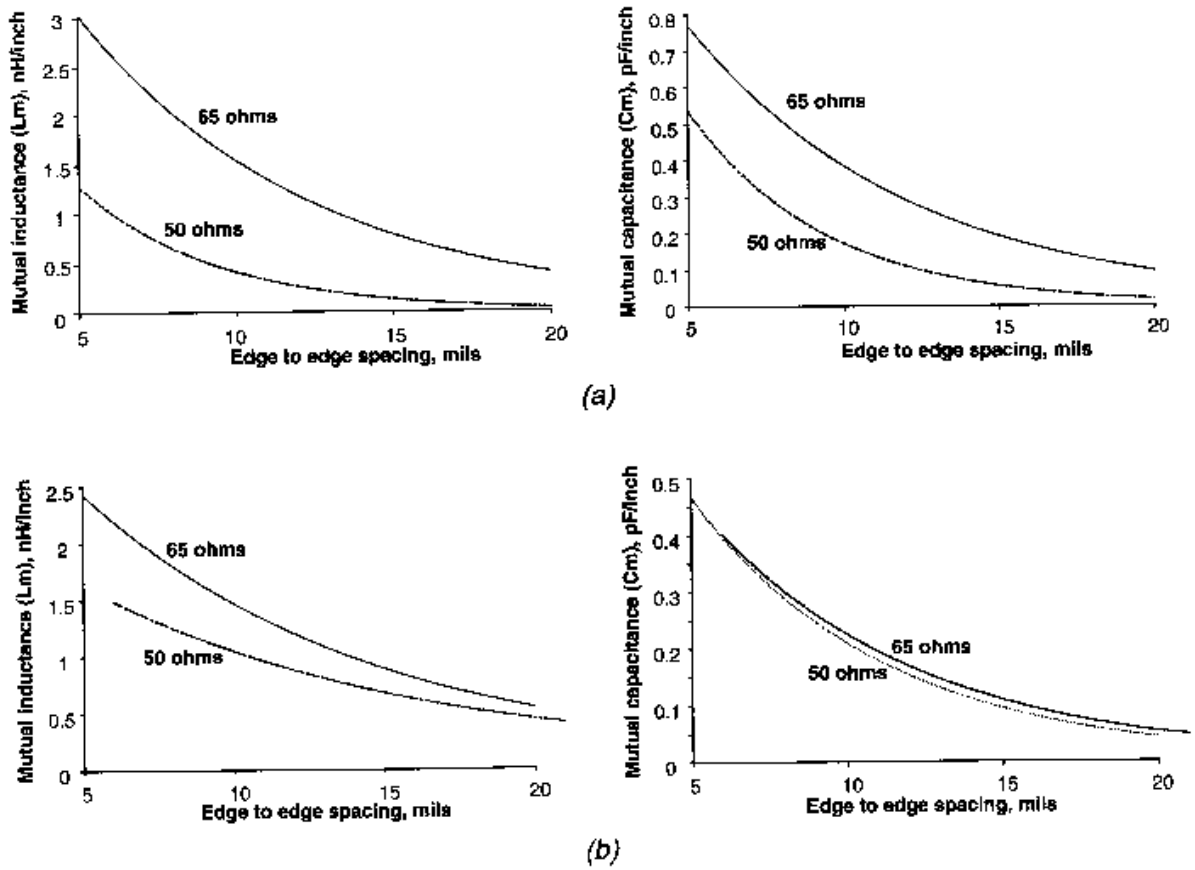


**FIGURE 3.14** Mutual inductance and capacitance for (*a*) stripline in Figure 3.13*a* and (*b*) microstrip in Figure 3.13*b*

# Example by simulation:

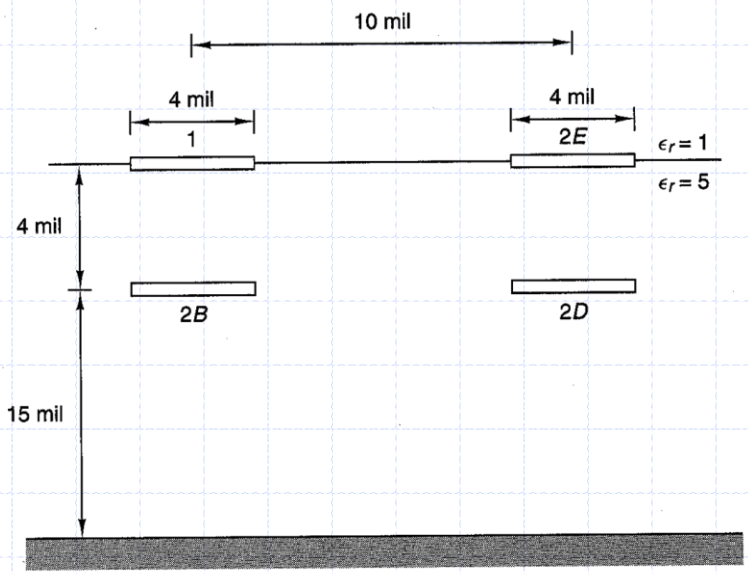


**Figure 7.4** Coupling of microstrip line 1 with another line in either the $2B$, $2D$, or $2E$ position. Only two lines are present at any one time.

Please compare the coupling characteristics for the three cases:

- Ze
- Zo

**TABLE 7.2** COUPLING PARAMETERS WITH MICROSTRIPLINE 1 (LINE 2 IS IN *B*, BROADSIDE; *D*, DIAGONAL; OR *E*, EDGE POSITION.)

| | *B* (roadside) | *D* (iagonal) | *E* (dge) |
|---|---|---|---|
| **L** (nH/in.) | $\begin{bmatrix} 15.85 & 10.34 \\ 10.34 & 14.83 \end{bmatrix}$ | $\begin{bmatrix} 16.12 & 6.12 \\ 6.12 & 14.95 \end{bmatrix}$ | $\begin{bmatrix} 16.09 & 7.07 \\ 7.07 & 16.09 \end{bmatrix}$ |
| **C** (pF/in.) | $\begin{bmatrix} 3.28 & -2.72 \\ -2.72 & 4.25 \end{bmatrix}$ | $\begin{bmatrix} 1.78 & -0.81 \\ -0.81 & 2.39 \end{bmatrix}$ | $\begin{bmatrix} 1.75 & -0.66 \\ -0.66 & 1.75 \end{bmatrix}$ |
| $k_m$ | 0.67 | 0.39 | 0.44 |
| $k_c$ | 0.73 | 0.39 | 0.38 |
| $K_b$ | 0.35 | 0.20 | 0.20 |
| $K_f$ (ns/in.) | 0.0064 | −0.0002 | −0.0053 |
| $Z_{oe}$ (Ω) | 159.88 | 133.27 | 145.73 |
| $Z_{oo}$ (Ω) | 27.65 | 56.42 | 61.28 |
| $Z_1$ (Ω) | 69.47 | 95.21 | 95.98 |
| $Z_2$ (Ω) | 59.08 | 79.05 | 95.98 |
| $T_1$ (ps/in.) | 228.16 | 169.36 | 167.67 |
| $T_2$ (ps/in.) | 250.99 | 189.16 | 167.67 |

# Effect of switching patterns on transmission line

## Crosstalk induced flight time and signal integrity variations

**What phenomena do you see ??**

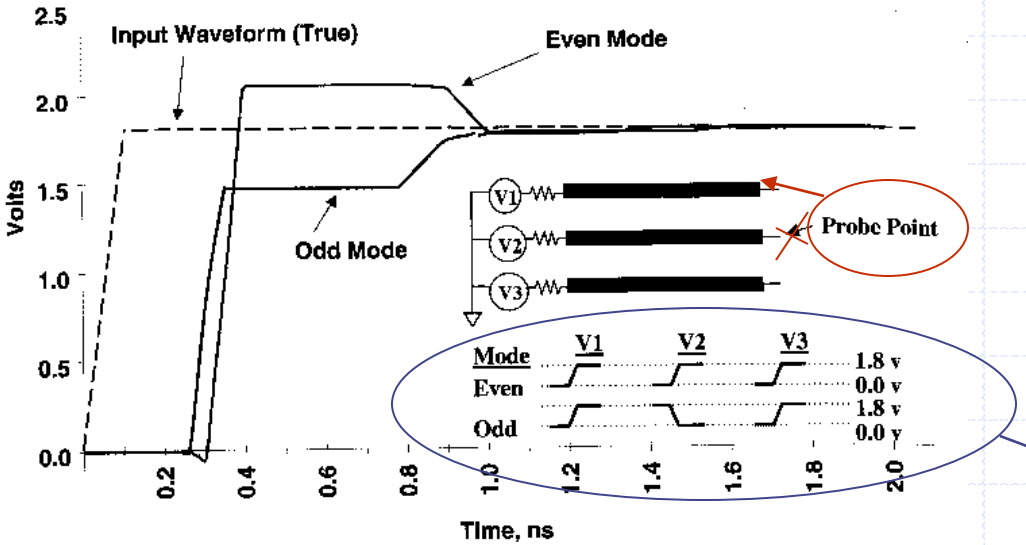


Switching pattern

**FIGURE 3.11** Effect of switching patterns on a three-conductor system.

# Effect of switching patterns on transmission line

- As the switching patterns are in even-mode:
  - Over-driven behavior is seen (Overshooting).
  - Longer propagation delay is seen.
- As the switching patters are in odd-mode:
  - Under-driven behavior is seen (Undershooting).
  - Shorter propagation delay is seen.
- Why ??

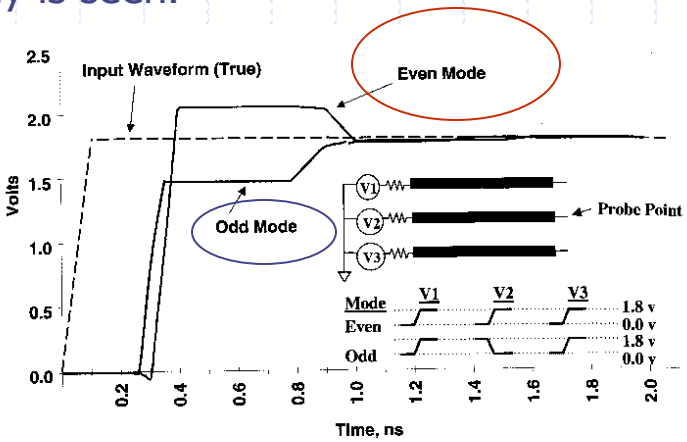


**FIGURE 3.11** Effect of switching patterns on a three-conductor system.

# Effect of switching patterns on transmission line

- Even-mode pattern ⇒ impedance changed from $Z_0$ to $Z_e > Z_0$ .
  ⇒ overdriven when $Z_e > Z_s$. ⇒ Slower propagation velocity.
- Odd-mode pattern ⇒ impedance changed from $Z_0$ to $Z_{odd} < Z_0$ .
  ⇒ under driven when $Z_{odd} < Z_s$. ⇒ Faster propagation velocity.

# Effect of switching patterns on transmission line

Simulating traces in a multiconductor system using a single-line equivalent model (SLEM)

Target trace is line 2. Please find the equivalent impedance and time delay

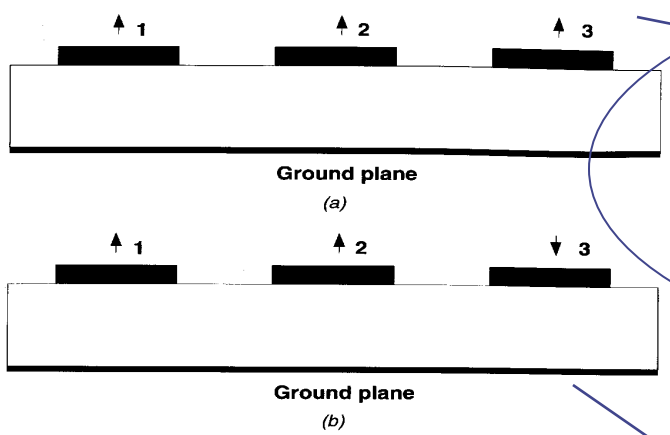


**FIGURE 3.12** Example switching pattern: (*a*) all bits switching in phase; (*b*) bits 1 and 2 switching in phase, bit 3 switching 180° out of phase.

$$Z_{2,\text{eff}} = \sqrt{\frac{L_{22} + L_{12} + L_{23}}{C_{22} - C_{12} - C_{23}}}$$

$$\text{TD}_{2,\text{eff}} = \sqrt{\left(L_{22} + L_{12} + L_{23}\right)\left(C_{22} - C_{12} - C_{23}\right)}$$

??

# Effect of switching patterns on transmission line

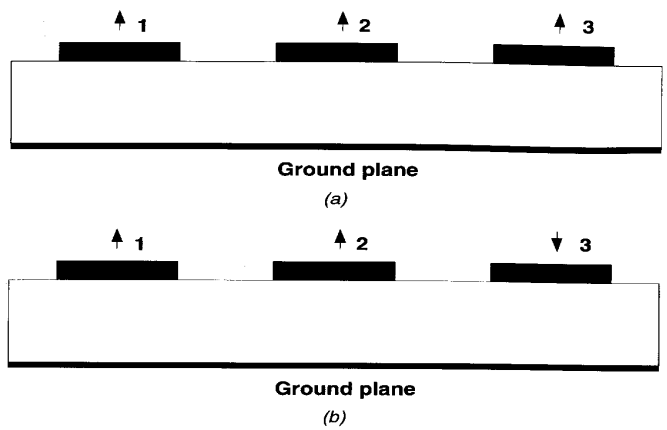


**FIGURE 3.12** Example switching pattern: (*a*) all bits switching in phase; (*b*) bits 1 and 2 switching in phase, bit 3 switching 180° out of phase.

$$\mathrm{TD}_{2,\mathrm{eff}} = \sqrt{\left(L_{22} + L_{12} - L_{23}\right)\left(C_{22} - C_{12} + C_{23}\right)}$$

$$Z_{2,\mathrm{eff}} = \sqrt{\frac{L_{22} + L_{12} - L_{23}}{C_{22} - C_{12} + C_{23}}}$$

# Example by TDR measurement:

## *Two Channel Differential TDR: Differential or Common Driven*

Driving differential signal

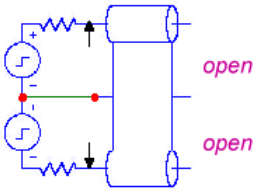


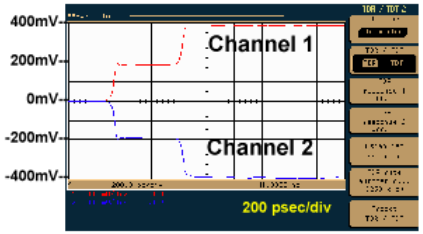


Driving common signal

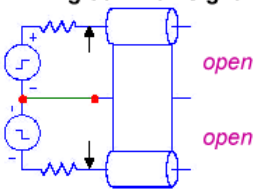


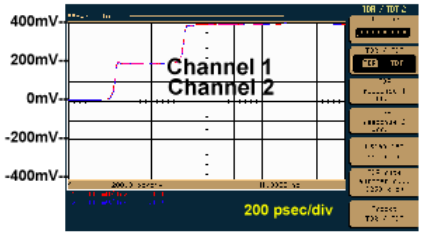


## *Measuring Odd and Even Impedance of Tightly Coupled Lines*

**Measured Impedance of one trace, as the other is driven:**
**Odd mode impedance: differentially driven pair**
**Even mode impedance: commonly driven pair**

**For identical lines:**

$Z_{11} = (Z_{even} + Z_{odd})$
$Z_{12} = (Z_{even} - Z_{odd})$

**Extracted Characteristic impedance matrix**

| | |
|---|---|
| 48.5 | 3.5 |
| 3.5 | 48.5 |

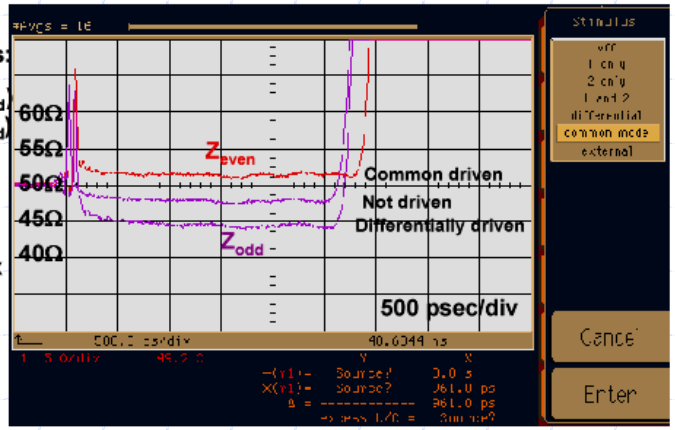

# Example by TDR measurement: question one ??

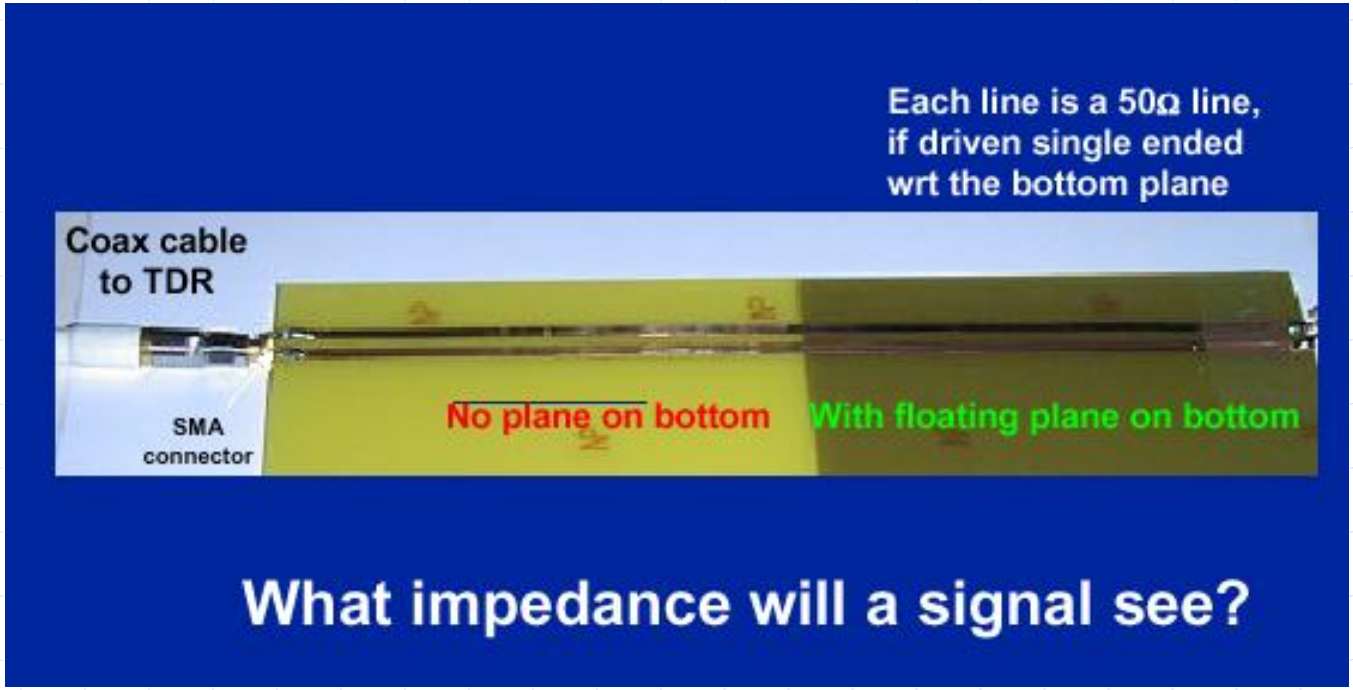

# Example by TDR measurement: question one??

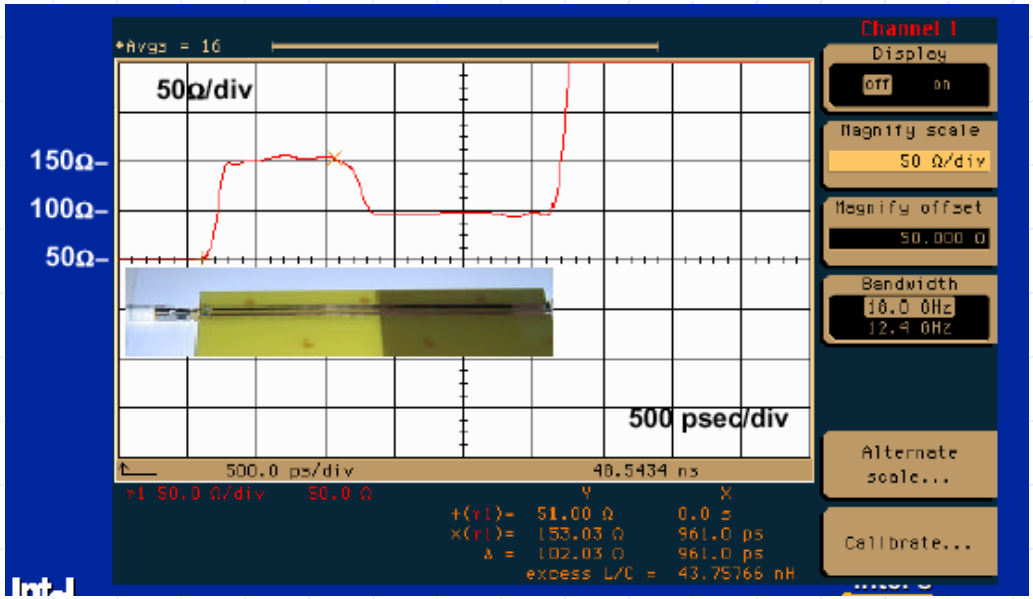


Differential impedance (D.I.) is 150Ω without GND plane
And about 100Ωwith GND plane. **Why ??**

First half: two traces refer each other like a twisted line, L ↑ and C ↓

Second half: two traces refer the GND plane, mutual coupling is quite small ($k_m \fallingdotseq k_c \fallingdotseq 0$), so D.I.=$2*Z_{odd} \fallingdotseq 2Z_0$=100

# Example by TDR measurement: question two??

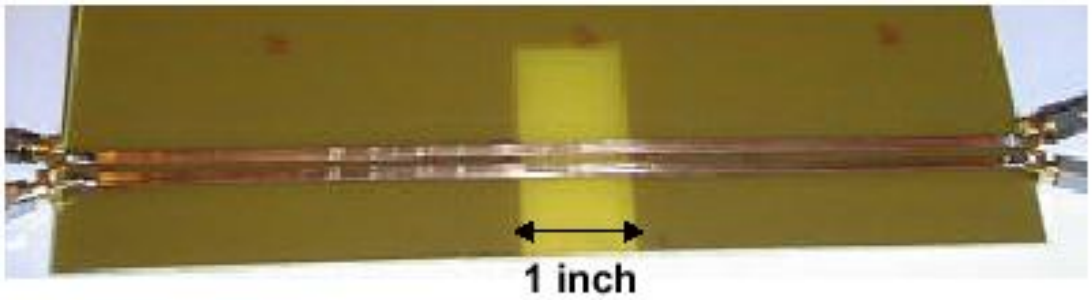


What's the variation of the differential impedance
For the differential pair crossing the slot ?

# Example by TDR measurement: question two??

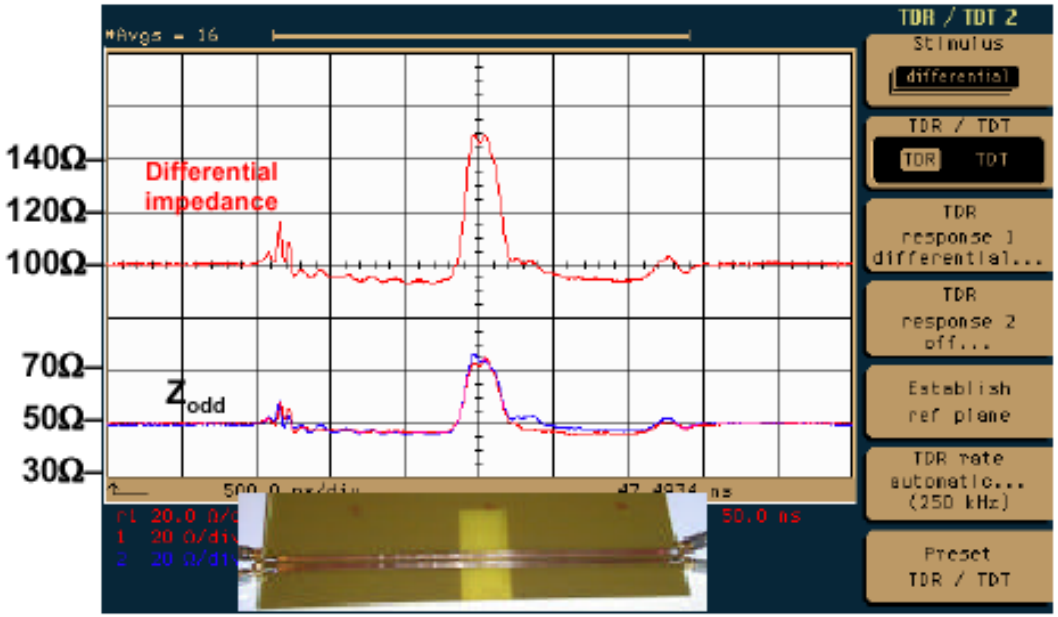


The gap behaves like a high impedance discontinuity which Will cause reflections.

# Homogeneous Medium

Conditions:

- Real (not Quasi-) TEM mode propagating on the transmission lines

Characteristics:

- Propagation delay per-unit length:

$$\tau_+ = \tau_- = \tau_0 \sqrt{1-k^2}$$

$$\text{where } k = k_m = k_c \text{ (Coupling coefficient)}$$

$$k_m = \frac{L_m}{\sqrt{L_1 L_2}}$$ : For mutual inductance coupling

$$k_c = \frac{C_m}{\sqrt{C_1 C_2}}$$ : For mutual capacitance coupling

## Symmetrical Lines on Homogeneous Medium

Conditions:

- $L_1 = L_2$ (balanced lines)
  $C_1 = C_2$
- The balanced lines are driven by
  ***common mode*** or ***differential mode*** only
- $$\tau_+ = \tau_-$$

Characteristics:

- Characteristic impedance

$$Z_{0e} Z_{0o} = Z_1^2$$

$$\text{where } Z_1 = \sqrt{\frac{L_1}{C_1}}$$

# Example: homogeneous coupled line

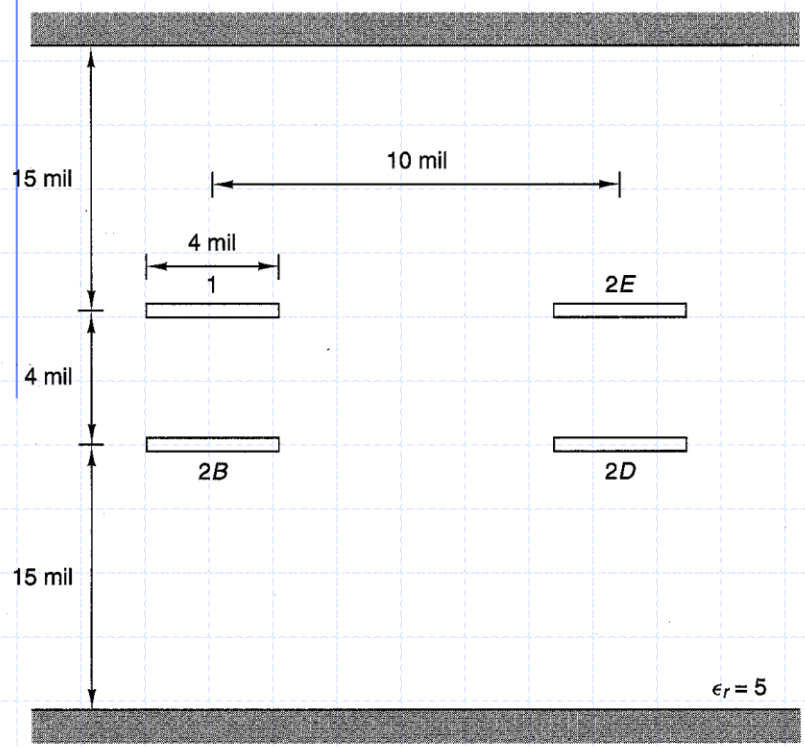


**Figure 7.5** Coupling of stripline 1 with another in either the $2B$, $2D$, or $2E$ position. Only two lines are present at any one time.

Please compare the coupling characteristics for the three cases:

1. K
2. Ze
3. Zo

**TABLE 7.3** COUPLING PARAMETERS WITH STRIPLINE 1 (LINE 2 IS IN *B*, BROADSIDE; *D*, DIAGONAL; OR *E*, EDGE POSITION.)

| | *B* (roadside) | *D* (iagonal) | *E* (dge) |
|---|---|---|---|
| **L** (nH/in.) | $\begin{bmatrix} 13.02 & 8.08 \\ 8.08 & 13.02 \end{bmatrix}$ | $\begin{bmatrix} 13.23 & 4.00 \\ 4.00 & 13.23 \end{bmatrix}$ | $\begin{bmatrix} 13.18 & 4.33 \\ 4.33 & 13.18 \end{bmatrix}$ |
| **C** (pF/in.) | $\begin{bmatrix} 4.48 & -2.78 \\ -2.78 & 4.48 \end{bmatrix}$ | $\begin{bmatrix} 2.99 & -0.90 \\ -0.90 & 2.99 \end{bmatrix}$ | $\begin{bmatrix} 3.05 & -1.00 \\ -1.00 & 3.05 \end{bmatrix}$ |
| $k$ | 0.62 | 0.30 | 0.33 |
| $K_b$ | 0.31 | 0.15 | 0.16 |
| $K_f$ (ns/in.) | 0 | 0 | 0 |
| $Z_{oe}(\Omega)$ | 111.39 | 90.92 | 92.47 |
| $Z_{oo}(\Omega)$ | 26.10 | 48.72 | 46.78 |
| $Z_1(\Omega)$ | 53.92 | 66.56 | 65.77 |
| $T_1$ ps/in. | 241.47 | 198.70 | 200.51 |

# A Quiz:

Please compare their $Z_e$, $Z_o$, $V_e$, $V_o$, and C.

(a)

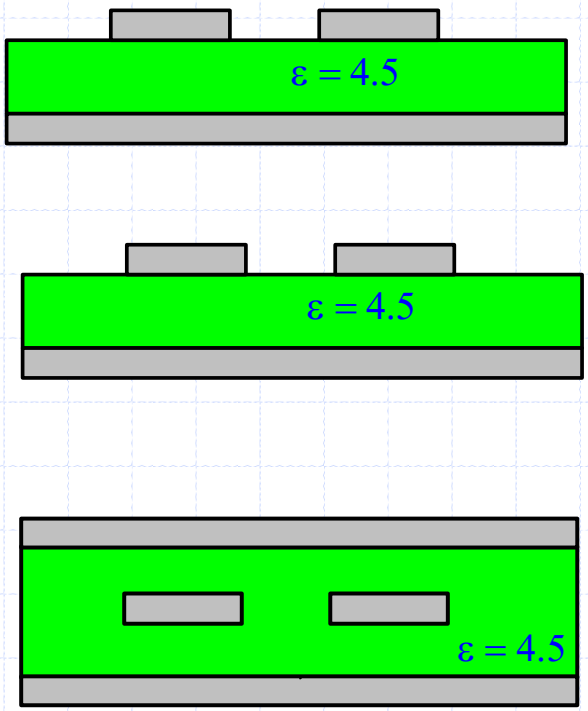


(b)

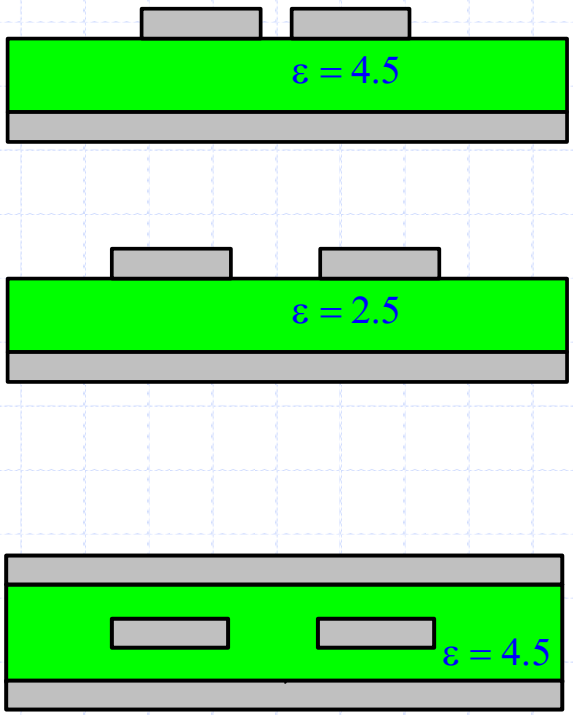

# Symmetrical Lines and asymmetrically driven

Asymmetrical driven

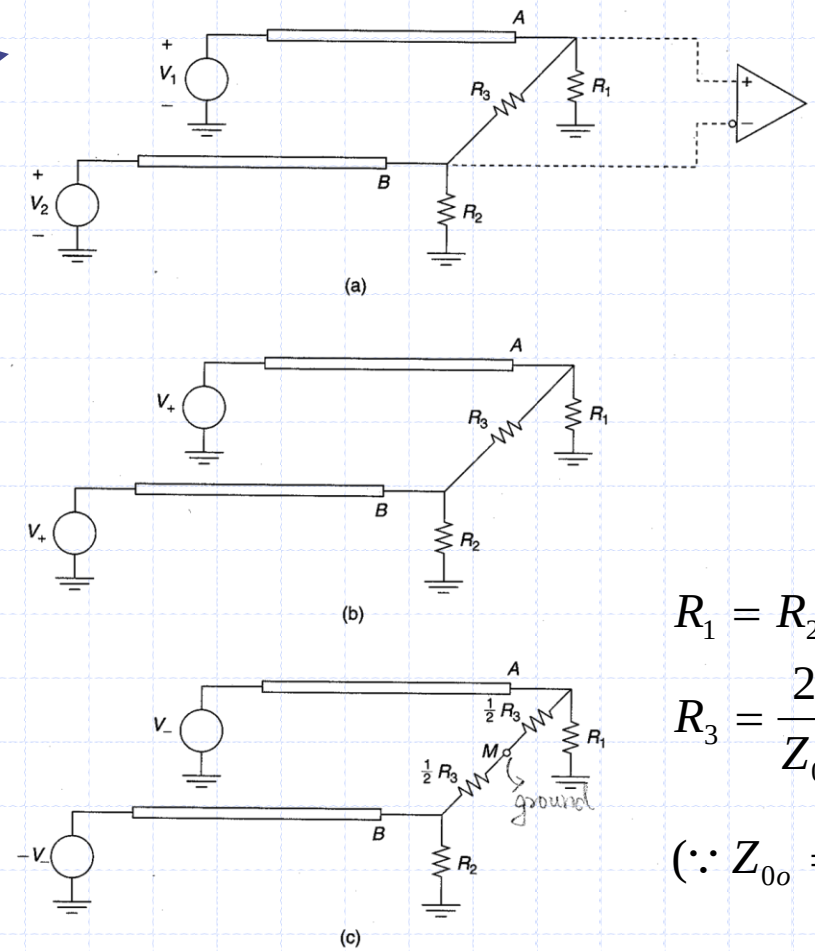


**Figure 7.7** The $\pi$ network termination of asymmetrically driven lines (a), decomposed into even mode (b) and odd mode (c).

$$V_+ = 0.5(V_1 + V_2)$$

$$V_- = 0.5(V_1 - V_2)$$

## $\Pi$ -Terminations:

$$R_1 = R_2 = Z_{0e} \text{ (terminate even mode)}$$

$$R_3 = \frac{2Z_{0e}Z_{0o}}{Z_{0e} - Z_{0o}} \text{ (terminate odd mode)}$$

$$(\because Z_{0o} = (R_1 // \frac{1}{2}R_3))$$

## Symmetrical Lines and asymmetrically driven

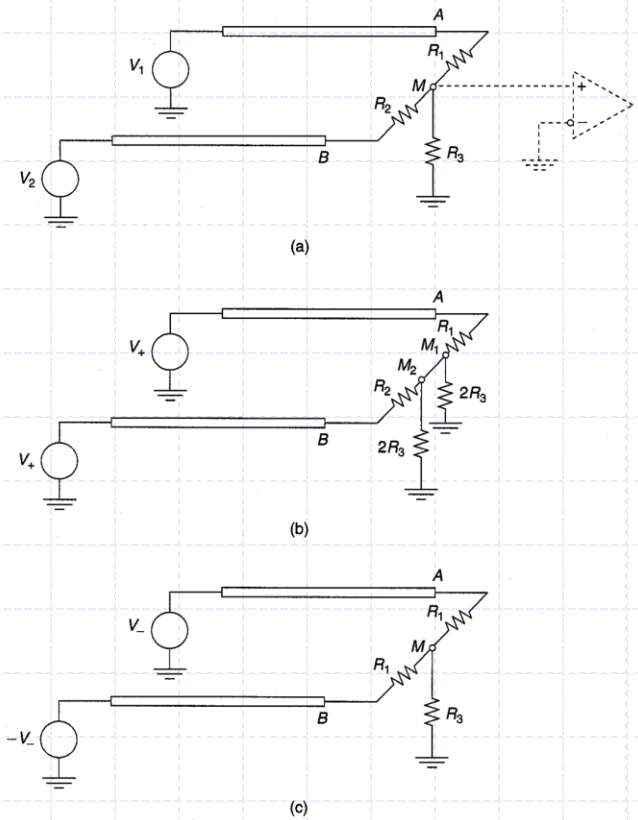


**Figure 7.8** T-network termination of asymmetrically driven line (a), decomposed into even mode (b) and odd mode (c).

## T - terminations

$$R_1 = R_2 = Z_{0o} \text{ (terminate odd mode)}$$

$$R_3 = \frac{1}{2}(Z_{0e} - Z_{0o}) \text{ (terminate even mode)}$$

$$(\because \mathrm{R}_2 + 2R_3 = Z_{0e})$$

# Imperfect Termination for Differential Transmission Line

1. What are their values of the resistance?
2. What are their advantages and disadvantages ?

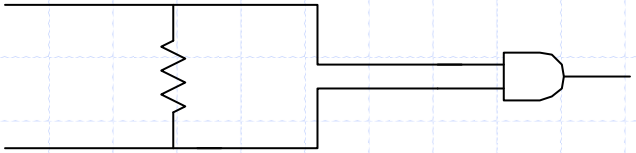

Bridge Termination

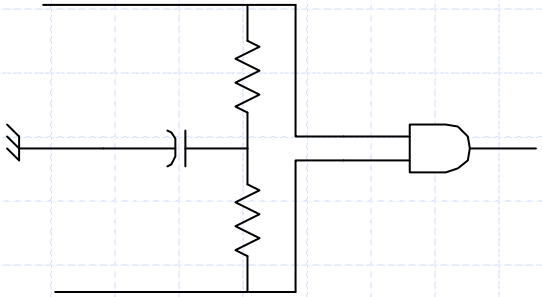

AC Termination

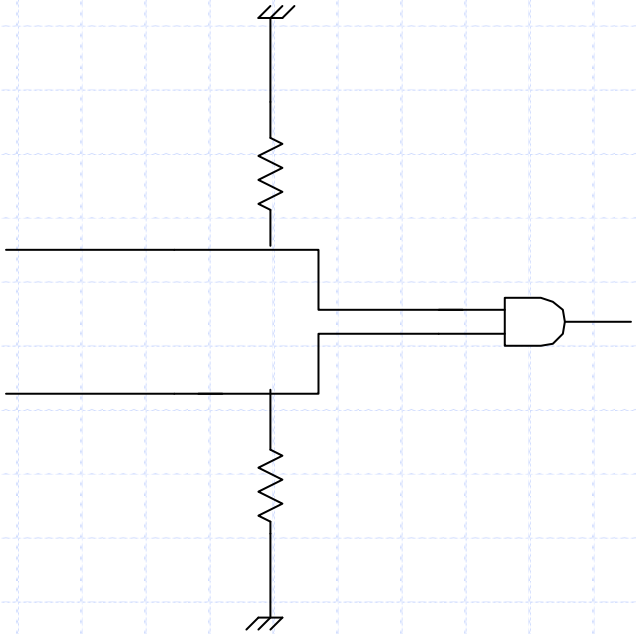

Single ended termination

# Imperfect Termination for Differential Transmission Line

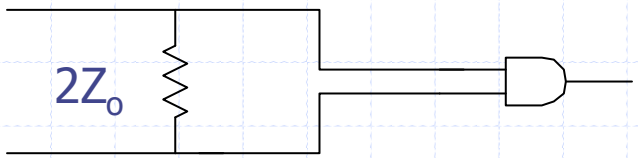


Bridge Termination

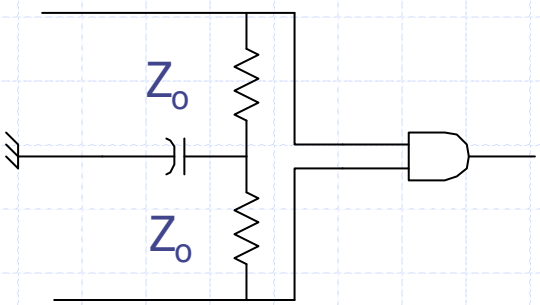


AC Termination

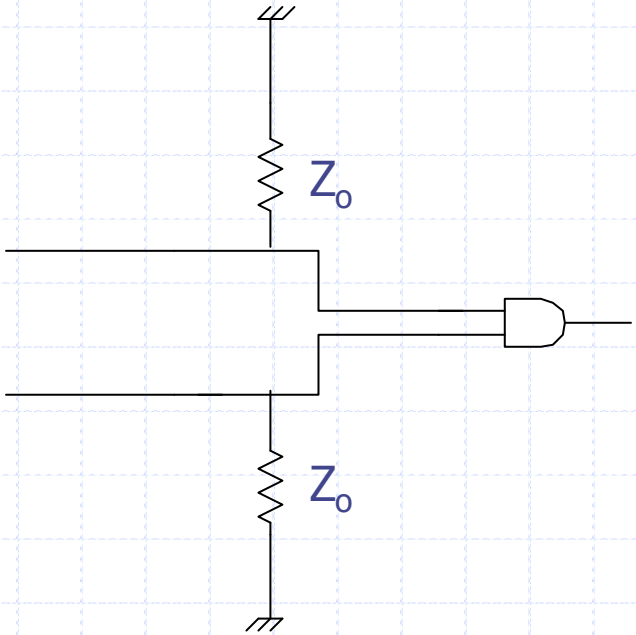


Single ended termination

# Imperfect Termination for Differential Transmission Line

Bridge:

1. Odd mode is completely absorbed
2. Even mode is completely reflected
3. Only one resistance is used.

Single-ended

1. Odd mode is completely absorbed
2. Even mode has the reflection coefficient $T= (Zo-Ze)/(Zo+Ze)$
3. The extra damping of the even mode costs an additional resistance.

AC

- Odd mode is completely absorbed
- Even mode is completely reflected at low frequency, but has the reflection $T = (Zo-Ze)/(Zo+Ze)$ at high frequency.

3. Compared to bridge type, even mode is attenuated without increasing static power dissipation.
4. Needing three components.

# Example: Termination for Differential Transmission Line

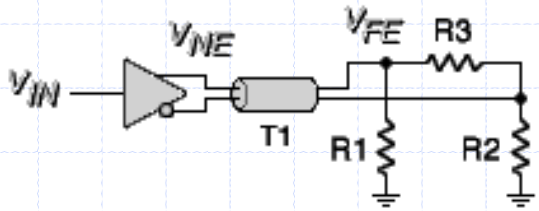


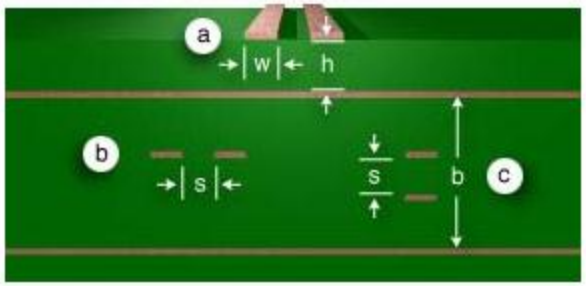


Examples: BC Strip W/H = 0.7, S/H = 1.04, er=4.4

$Z_{0\ even}$ 76 ohms  $e_{eff\ even}$ 3.45  $Z_{0\ odd}$ 56 ohms  $e_{eff\ odd}$ 2.94

Length 25 cm

**DRIVER PARAMETERS**

Driver: Ideal voltage source  $R_S$ 0 ohms

*- Only for ideal voltage source driver -*

Risetime 1000 ps  Phase 0 ps

Step + 3 V  Step - 3 V  Common Mode Voltage 0 V

**TERMINATION** Auto-terminate

$R_1$ 1e+99 ohms  $R_2$ 1e+99 ohms  $R_3$ 112 ohms  $C_1$ 100 pF

# Example: Termination for Differential Transmission Line

A simple bridge termination

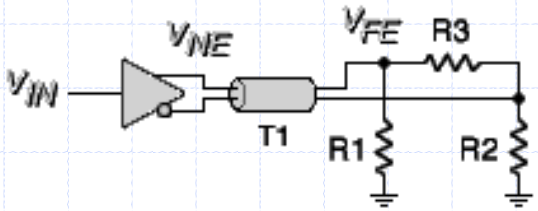


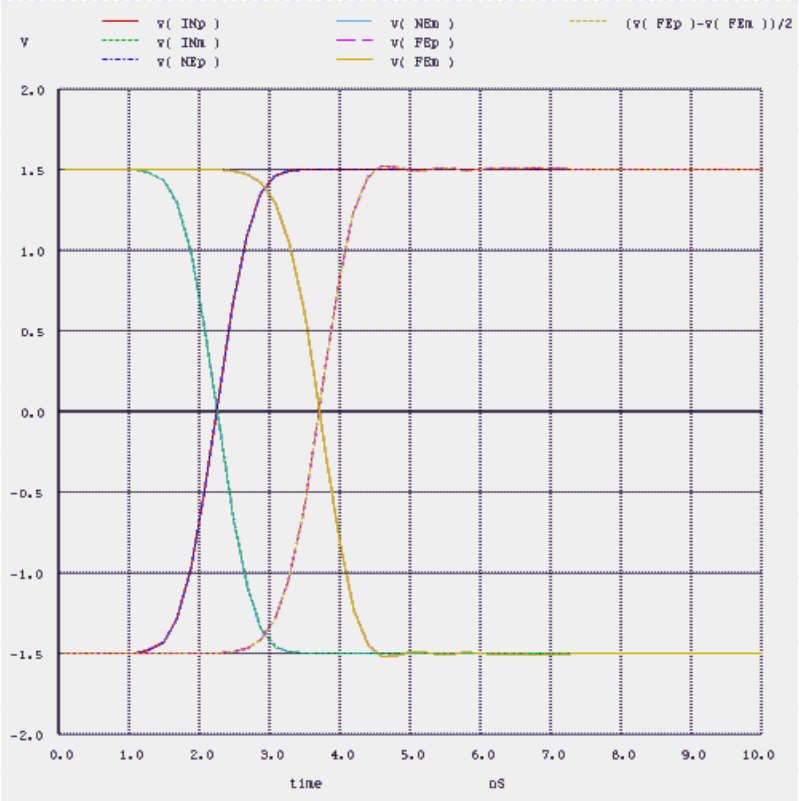

# Example: Termination for Differential Transmission Line

A simple bridge termination, but Unbalance driving

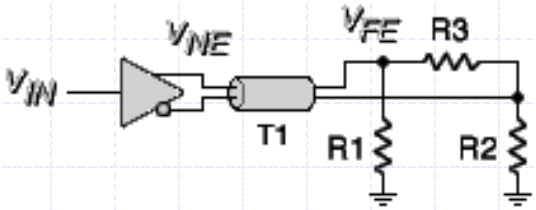


**TRANSMISSION LINE PARAMETERS**

Examples: BC Strip W/H = 0.7, S/H = 1.04, er=4.4

$Z_{0\ even}$ 76 ohms  $e_{eff\ even}$ 3.45  $Z_{0\ odd}$ 56 ohms  $e_{eff\ odd}$ 2.94

Length 25 cm

**DRIVER PARAMETERS**

Driver: Ideal voltage source  $R_S$ 0 ohms

*- Only for ideal voltage source driver -*

Risetime 1000 ps  Phase 750 ps

Step + 3 V  Step - 2.7 V  Common Mode Voltage 0.5 V

**TERMINATION** Auto-terminate

$R_1$ 1e+99 ohms  $R_2$ 1e+99 ohms  $R_3$ 112 ohms  $C_1$ 100 pF

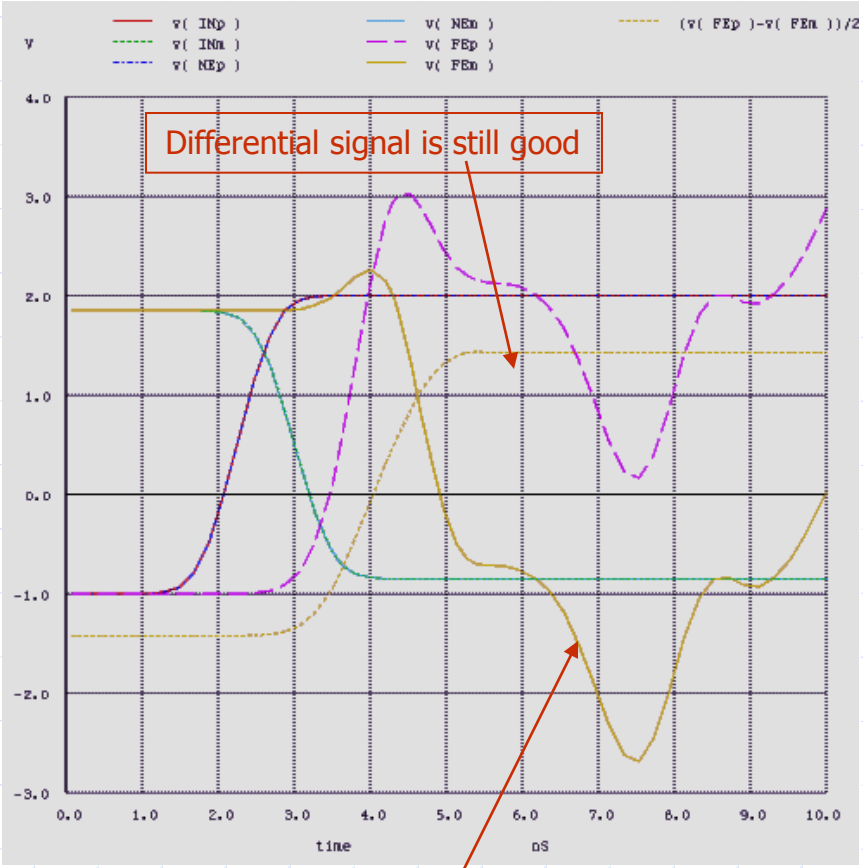


Common signal on each line is oscillating

# Example: Termination for Differential Transmission Line

A Pi-termination for unbalance driving

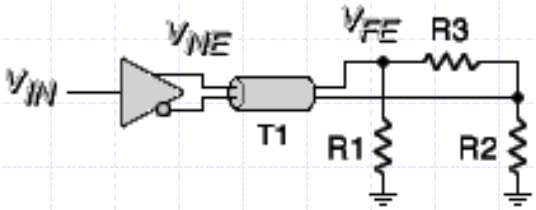


**TRANSMISSION LINE PARAMETERS**

Examples: BC Strip W/H = 0.7, S/H = 1.04, er=4.4

$Z_{0\ even}$ 76 ohms  $e_{eff\ even}$ 3.45  $Z_{0\ odd}$ 56 ohms  $e_{eff\ odd}$ 2.94

Length 25 cm

**DRIVER PARAMETERS**

Driver: Ideal voltage source  $R_S$ 0 ohms

*- Only for ideal voltage source driver -*

Risetime 1000 ps  Phase 750 ps

Step + 3 v  Step - 2.7 v  Common Mode Voltage 0.5 v

**TERMINATION** Auto-terminate

$R_1$ 76 ohms  $R_2$ 76 ohms  $R_3$ 425 ohms  $C_1$ 100 pF

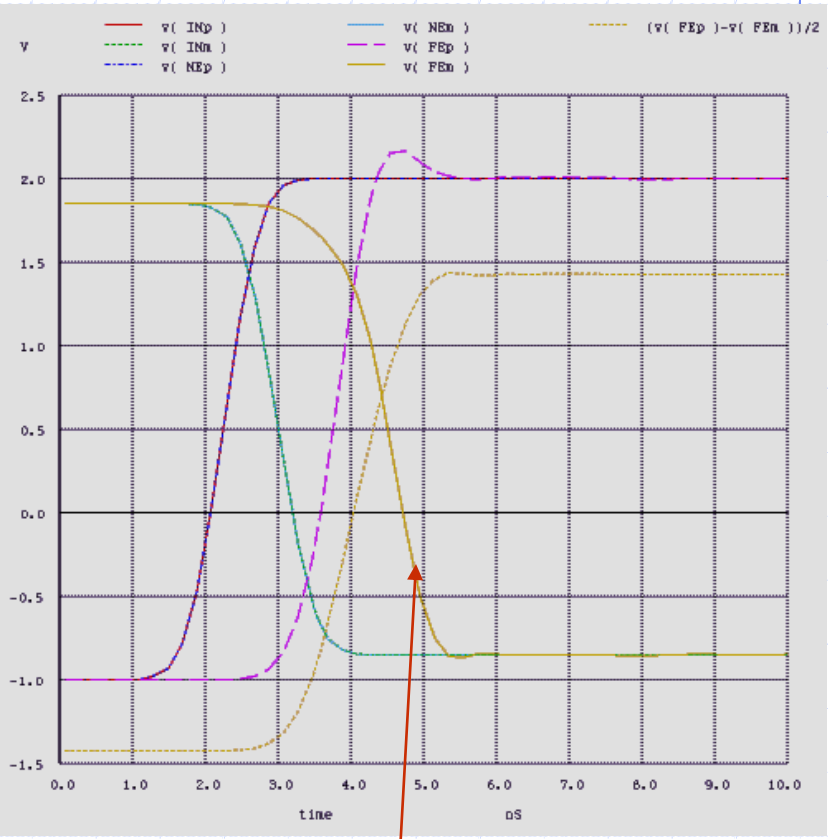


Common-mode is damped

# Example: Termination for Differential Transmission Line

Common-mode resonance
Differential pair excited by common-mode signal

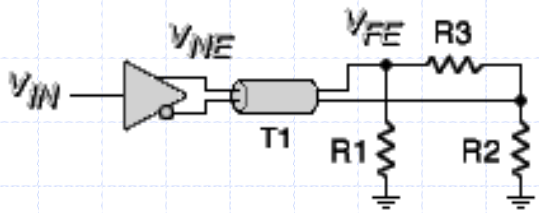


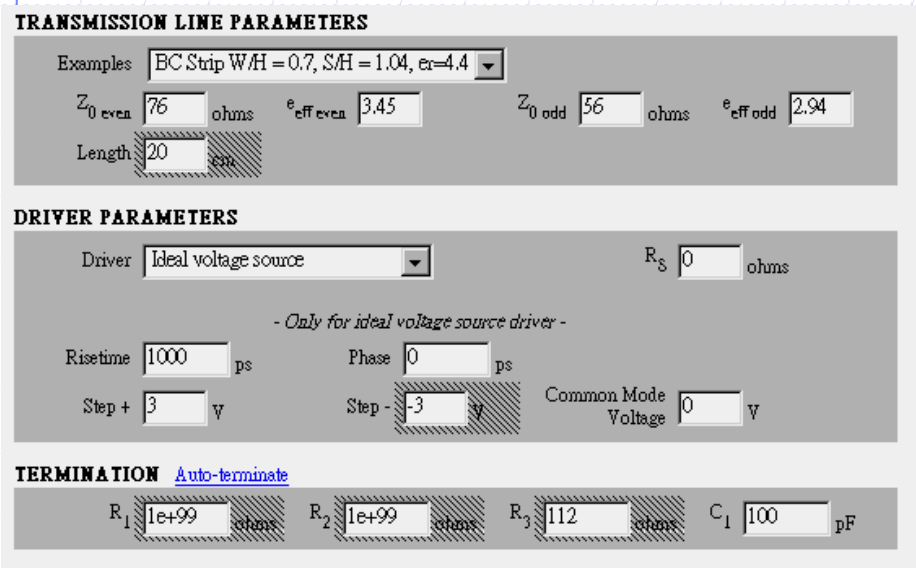


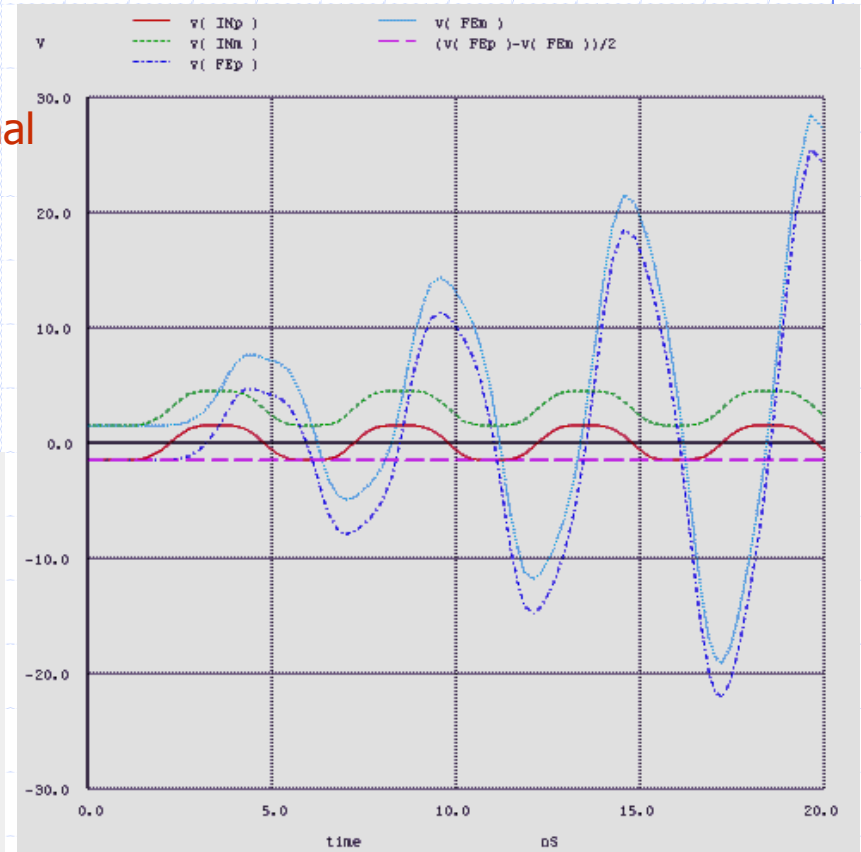

# Example: Termination for Differential Transmission Line

Single-ended termination for
Unbalanced driving

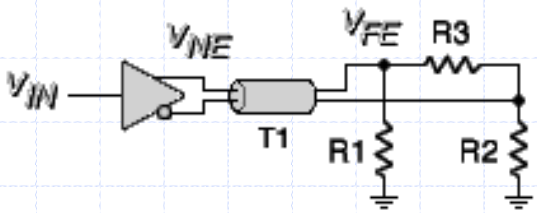


**TRANSMISSION LINE PARAMETERS**

Examples: BC Strip W/H = 0.7, S/H = 1.04, er=4.4

$Z_{0\ even}$ 76 ohms  $e_{eff\ even}$ 3.45  $Z_{0\ odd}$ 56 ohms  $e_{eff\ odd}$ 2.94

Length 25 cm

**DRIVER PARAMETERS**

Driver: Ideal voltage source  $R_S$ 0 ohms

*- Only for ideal voltage source driver -*

Risetime 1000 ps  Phase 750 ps

Step + 3 v  Step - 2.7 v  Common Mode Voltage 0.5 v

**TERMINATION** Auto-terminate

$R_1$ 56 ohms  $R_2$ 56 ohms  $R_3$ 1e+99 ohms  $C_1$ 100 pF

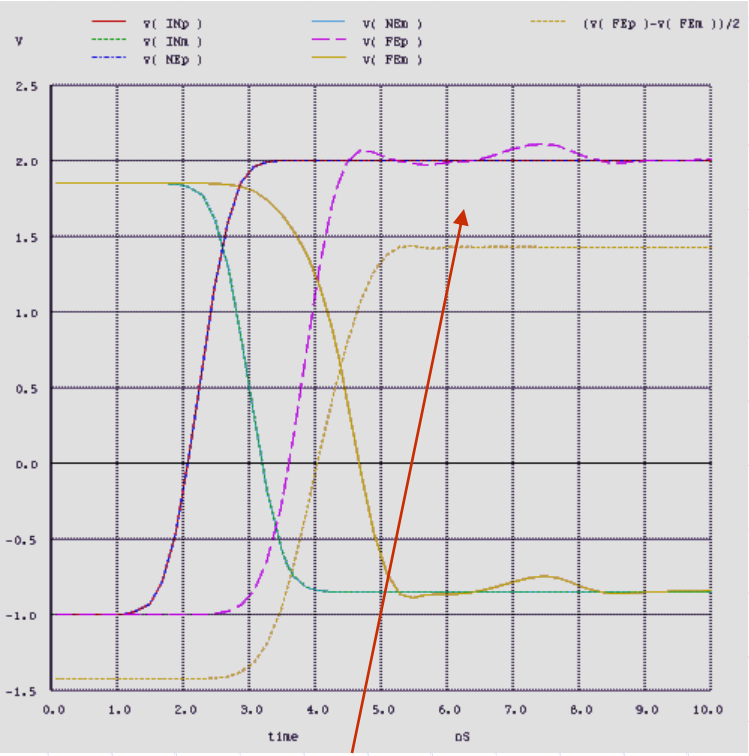


Better than bridge termination

# Example: Termination for Differential Transmission Line

AC T-termination for
Unbalanced driving

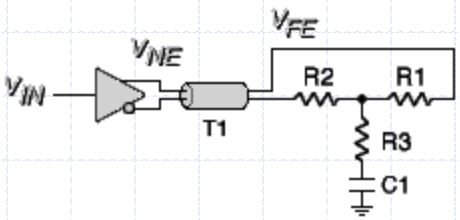


**TRANSMISSION LINE PARAMETERS**

Examples: BC Strip W/H = 0.7, S/H = 1.04, er=4.4

$Z_{0\ even}$ 76 ohms  $e_{eff\ even}$ 3.45  $Z_{0\ odd}$ 56 ohms  $e_{eff\ odd}$ 2.94

Length 25 cm

**DRIVER PARAMETERS**

Driver: Ideal voltage source  $R_S$ 0 ohms

*- Only for ideal voltage source driver -*

Risetime 1000 ps  Phase 750 ps

Step + 3 V  Step - 2.7 V  Common Mode Voltage 0.5 V

**TERMINATION** Auto-terminate

$R_1$ 56 ohms  $R_2$ 56 ohms  $R_3$ 0 ohms  $C_1$ 100 pF

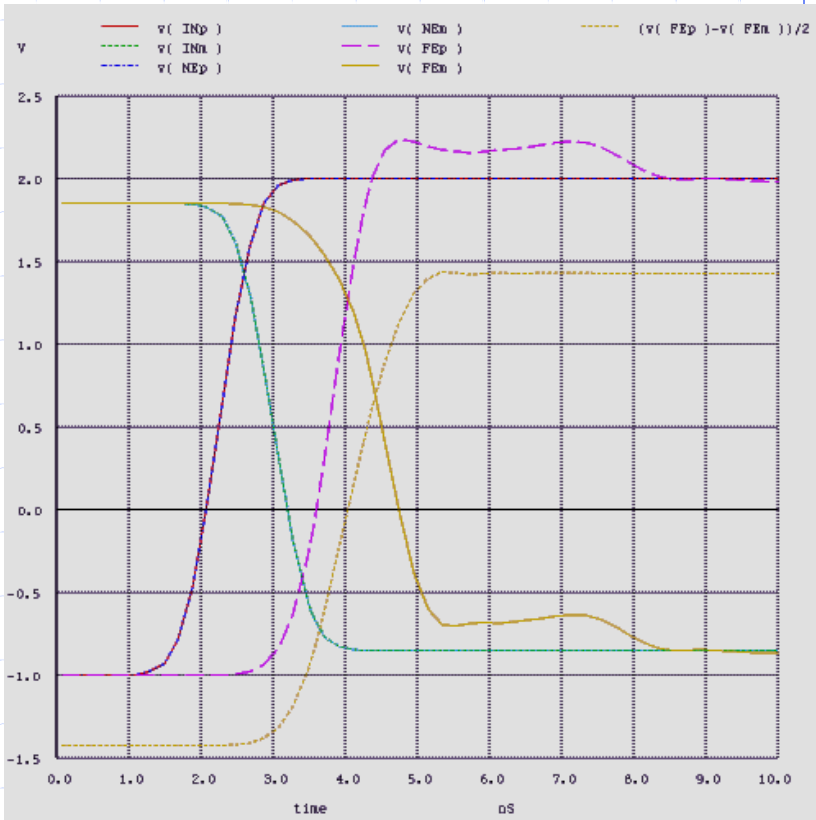

# Example: Termination for Differential Transmission Line

**Bridge termination** at the far end and
**Series termination** at the near end

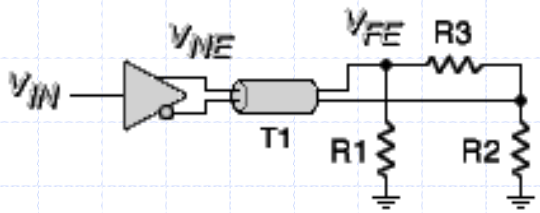


Examples: BC Strip W/H = 0.7, S/H = 1.04, er=4.4

$Z_{0\ even}$ 76 ohms  $e_{eff\ even}$ 3.45  $Z_{0\ odd}$ 56 ohms  $e_{eff\ odd}$ 2.94

Length 25 cm

**DRIVER PARAMETERS**

Driver: Ideal voltage source  $R_S$ 76 ohms

*- Only for ideal voltage source driver -*

Risetime 1000 ps  Phase 750 ps

Step + 3 V  Step - 2.7 V  Common Mode Voltage 0.5 V

**TERMINATION** Auto-terminate

$R_1$ 1e+99 ohms  $R_2$ 1e+99 ohms  $R_3$ 112 ohms  $C_1$ 100 pF

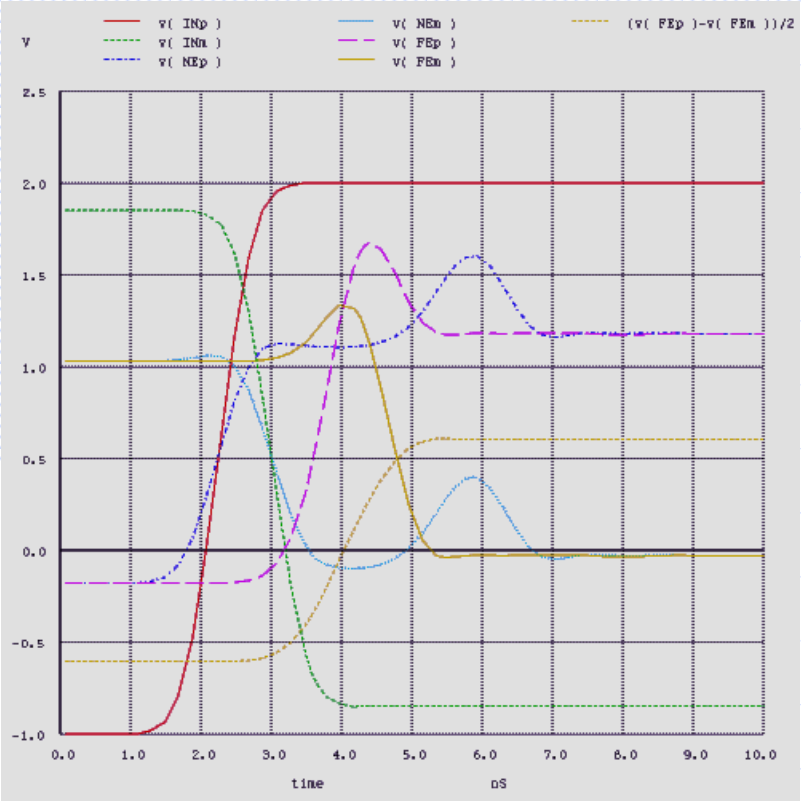


1. Power saving
2. Idea of LVDS

# Example: Termination for Differential Transmission Line

**Bridge termination** at the far end and
**Series termination** at the near end
For LVDS case

Examples: BC Strip W/H = 0.7, S/H = 1.04, er=4.4

$Z_{0\ even}$ 76 ohms  $e_{eff\ even}$ 3.45  $Z_{0\ odd}$ 56 ohms  $e_{eff\ odd}$ 2.94

Length 15 cm

**DRIVER PARAMETERS**

Driver: National LVDS 90LV031ATM  $R_S$ 0 ohms

*- Only for ideal voltage source driver -*

Risetime 1000 ps  Phase 0 ps

Step + 0.5 V  Step - 0.5 V  Common Mode Voltage 1.5 V

**TERMINATION** Auto-terminate

$R_1$ 1e+99 ohms  $R_2$ 1e+99 ohms  $R_3$ 112 ohms  $C_1$ 100 pF

**PARASITICS**

$L_{P1}$ 1 nH  $C_{P1}$ 5 pF  $L_{P2}$ 1 nH  $C_{P2}$ 8 pF

$C_{P12}$ 0 pF

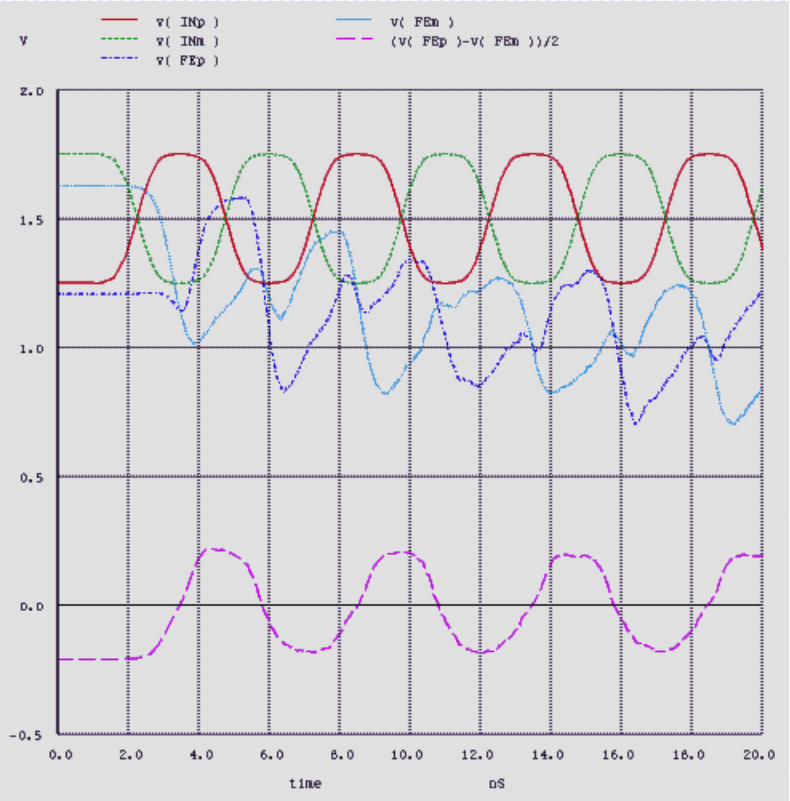

# Example: Effects of Termination Networks on Signal-Induced EMI from the Shields of Fibre Channel Cables Operating in the Gb/s Regime

2000 *IEEE EMC Symposium*

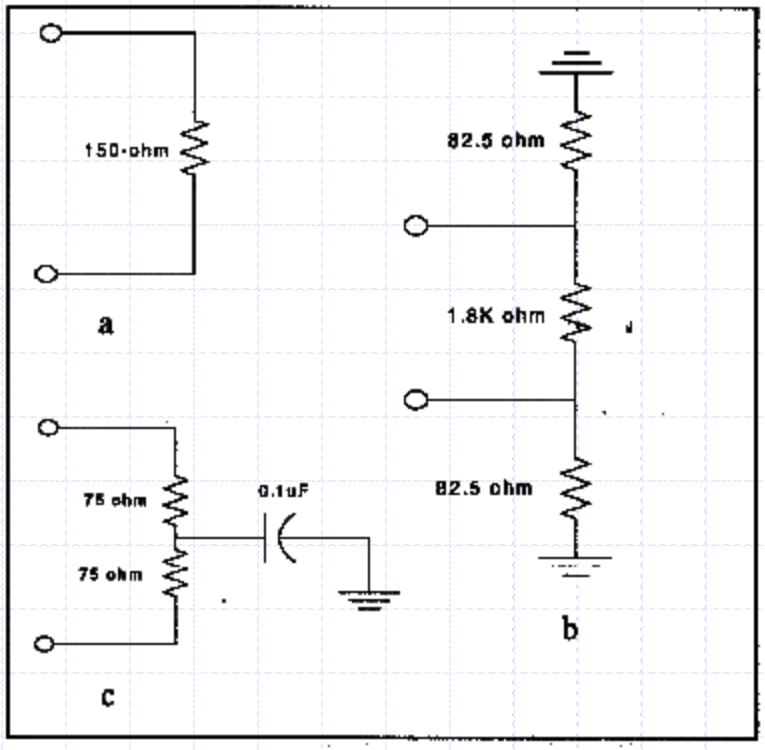


**Figure 1: Termination networks: (a) Differential; (b) Pi; and (c) AC-Tee**

# Example: Effects of Termination Networks on Signal-Induced EMI from the Shields of Fibre Channel Cables Operating in the Gb/s Regime

## Measurement of $S_{11}$ for both differential mode and common mode

Termination effect is reduced for high frequency range

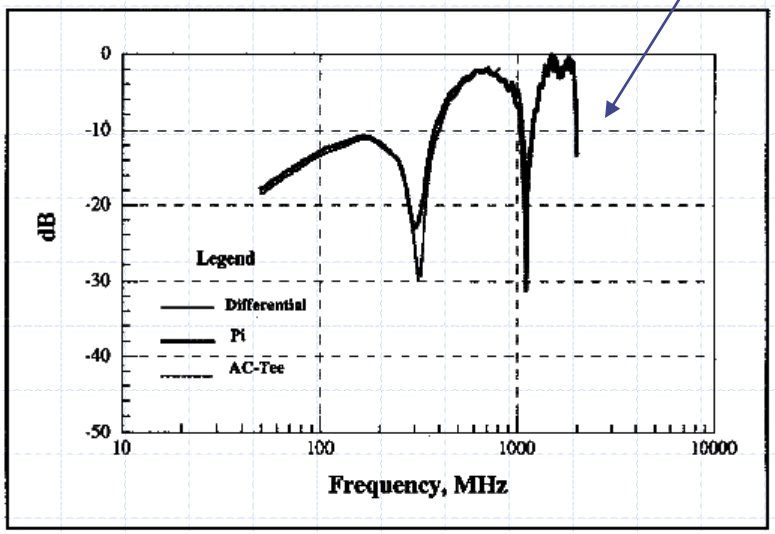


Figure 8: Differential-mode reflection coefficients of three termination networks as measured through a six inch cable assembly.

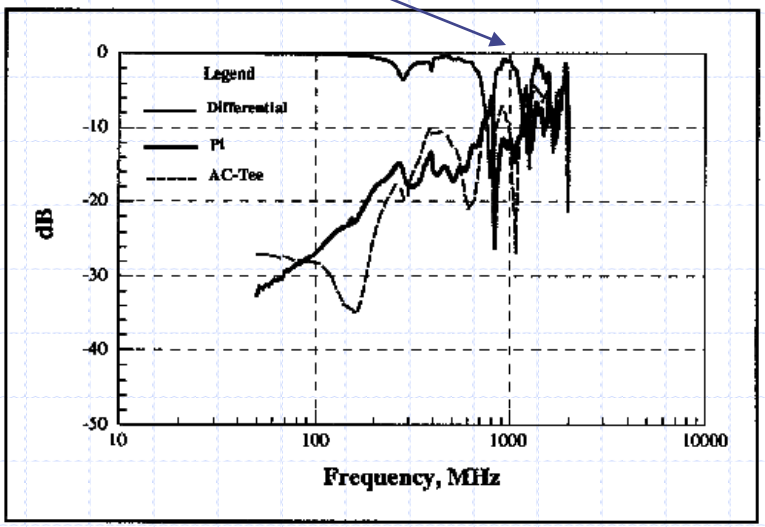


Figure 9: Common-mode reflection coefficients of three termination networks as measured through a six inch cable assembly.

# Example: Effects of Termination Networks on Signal-Induced EMI from the Shields of Fibre Channel Cables Operating in the Gb/s Regime

## EMI

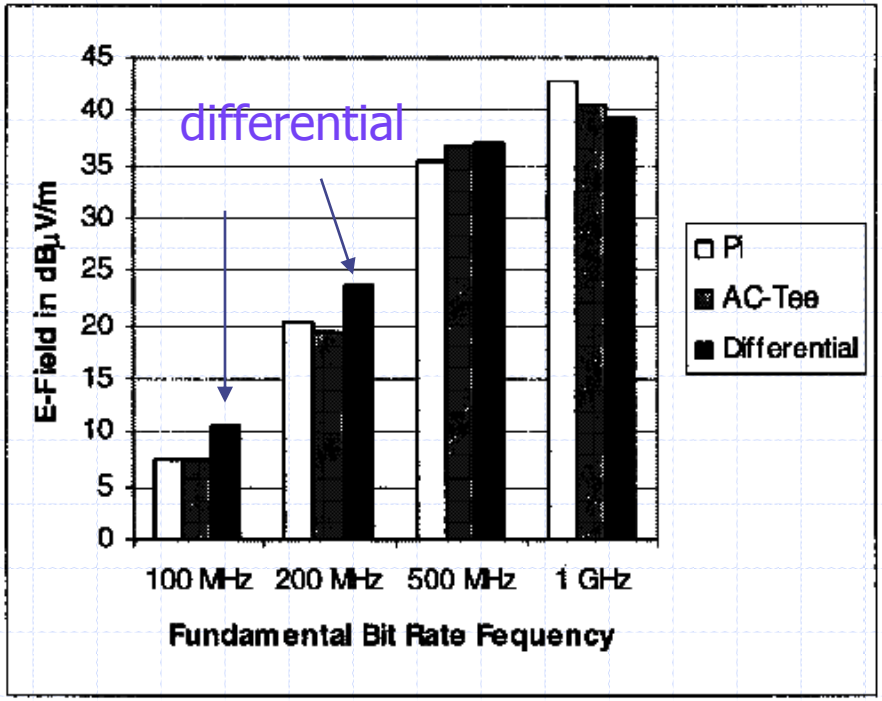


**Figure 10: Electric field magnitude from a 1 meter length cable terminated in three different termination networks. E-field measured at a 3 meter distance**

Why the termination effect is degraded at high frequency range ?

# Quantitative description of crosstalk

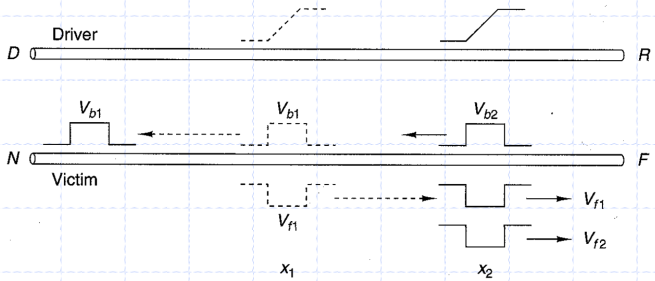


**Figure 7.10** Forward and backward traveling waves. The incremental pulses are shown dashed at $t = 0$ and solid at $t = \tau$.

Capacitive coupling Inductive Coupling

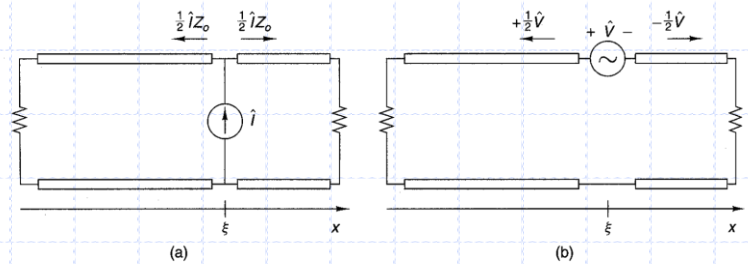


**Figure A7.1** Wave generation in response to (a) shunt current source and (b) series voltage source excitation.

$$V_f(x,t) = K_f\, x \frac{d}{dt} V_{in}(t - \tau x)$$

(see appendix 7.1)

$$V_b(x,t) = K_b[V_{in}(t - \tau x) - V_{in}(t + \tau x - 2T_d)]$$

If the coupled lines are symmetrical

$$K_f = -\frac{1}{2}\left(\frac{L_m}{Z_1} - C_m Z_1\right) \qquad (\text{ns/cm}) : \text{Forward coupling coefficient}$$

$$K_b = \frac{1}{4\tau}\left(\frac{L_m}{Z_1} + C_m Z_1\right) \qquad (\text{dimensionless}) : \text{Backward coupling coefficient}$$

# Quantitative description of crosstalk

In the loosely coupled system ($k_m$, $k_c$ << 1)

$$Z_1 = \sqrt{\frac{L_1}{C_1}} \text{ and } \tau = \sqrt{L_1 C_1} \text{ is accurate enough}$$

$$\therefore K_f = -\frac{\tau}{2}\left(\frac{L_m}{\tau Z_1} - \frac{C_m Z_1}{\tau}\right) = -\frac{\tau}{2}(k_m - k_c)$$

$$K_b = \frac{1}{4\tau}\left(\frac{L_m}{Z_1} + C_m Z_1\right) = \frac{1}{4}(k_m + k_c)$$

1. It is clear that the backward coupling can be reduced by decreasing the mutual coupling ($L_m$ and $C_m$) or by increasing the coupling to ground($L_1$, $L_2$, $C_1$, and $C_2$).
2. The forward crosstalk is zero for two identical lines in homogeneous medium. (not easy in practical circuits)

# Crosstalk for a ramp step driver

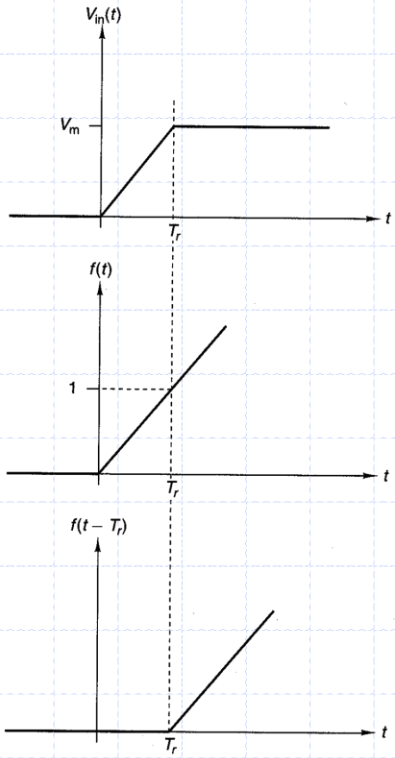


**Figure 7.11** The ramp step driver signal can be expressed as the difference between $f(t)$ and $f(t - T_r)$.

$$V_{in}(t) = V_m[f(t) - f(t - T_r)]$$

# Crosstalk for a ramp step driver

Forward crosstalk at the far end:

$$V_f(l,t) = K_f\, l \frac{d}{dt} V_{in}(t - T_d)$$
$$= K_f\, l \frac{V_m}{T_r} \quad , \; T_d < t < T_d + T_r$$
$$= 0 \quad \text{elsewhere}$$

Backward crosstalk at the near end

- If $T_r < 2T_d$

$$V_b(0,t) = K_b[V_{in}(t) - V_{in}(t - 2T_d)]$$
$$V_{b,\max} \propto K_b$$

- If $T_r > 2T_d$

$$V_{b,\max} = 2\left(\frac{\tau l}{T_r}\right) K_b V_m \propto \frac{K_b}{T_r}$$

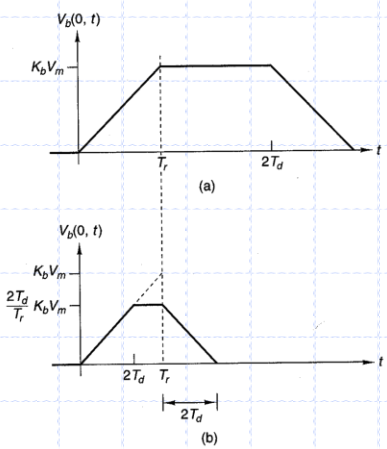


**Figure 7.12** Waveform of backward crosstalk in response to a ramp step driver for (a) a typical case ($2T_d > T_r$) and (b) a short line ($2T_d < T_r$).

# SPICE simulation of crosstalk

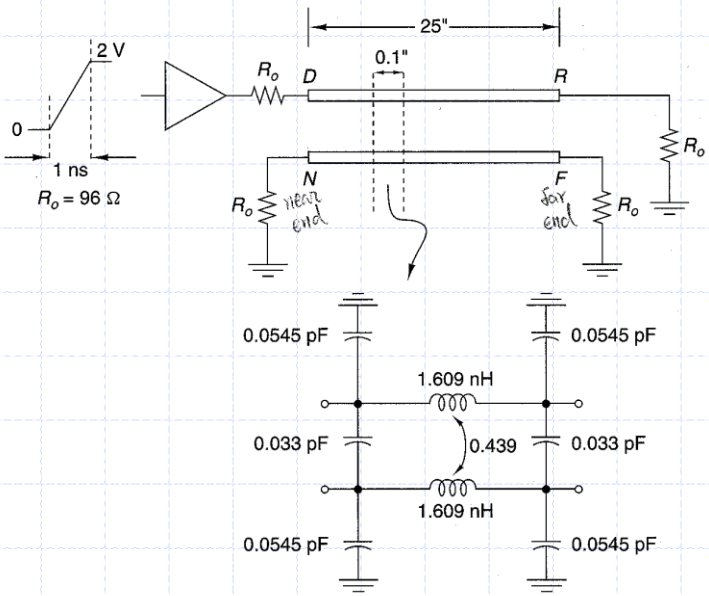


**Figure 7.13** Circuit of two edge-coupled lines, plus a subcircuit for 0.1 inch.

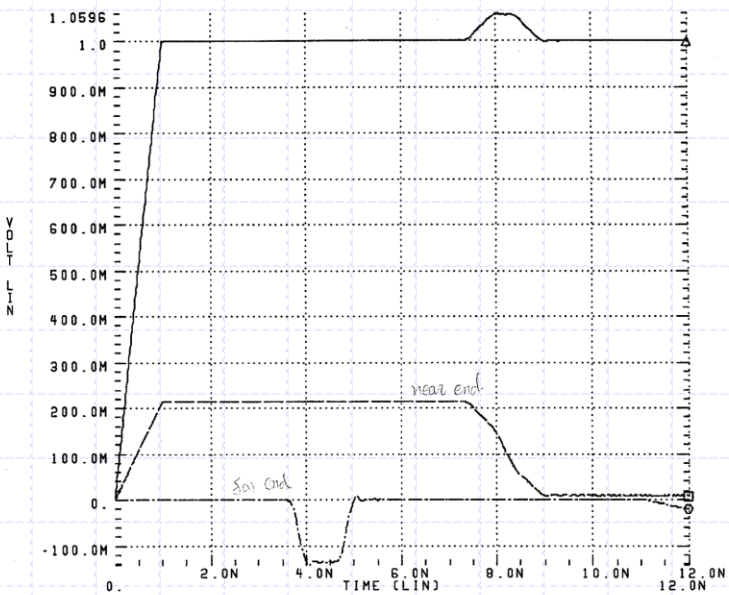


**Figure 7.14** SPICE-simulated crosstalk waveforms at (from top to bottom) the driver $D$, near end $N$, and far end $F$.

# Measurement of coupling coefficient (Frequency domain) : (example) RAMBUS RIMM Connector

- Test module design

**Figure 6: Test Module Pad Layout (Concept)**

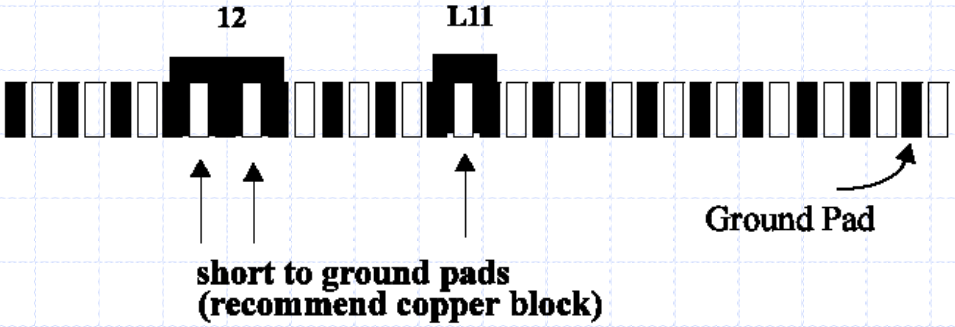


**Figure 7: Test Board Footprint (Concept)**

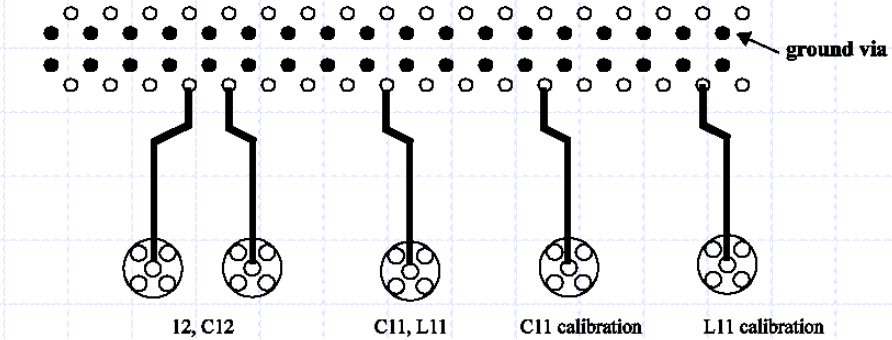


**All traces at same length (within ± 0.125 mm)**

# Measurement of coupling coefficient (Frequency domain) : RAMBUS RIMM Connector

- Calibration (Open, short, load )

Figure A-8: Open Calibration

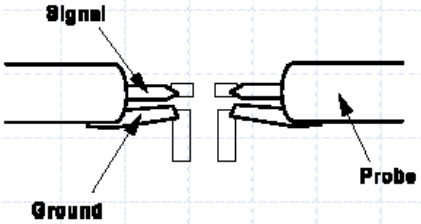


Figure A-9: Short Calibration

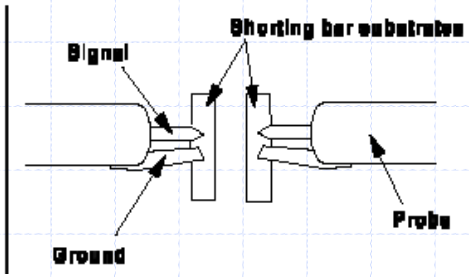


Figure A-10: Matched 50 Ohm Load Calibration

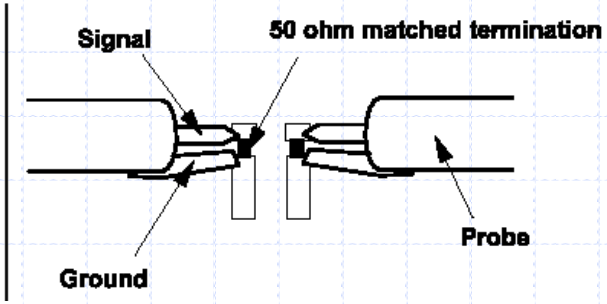

# Measurement of coupling coefficient (Frequency domain) : (example) RAMBUS RIMM Connector

- Theory (mutual capacitance)

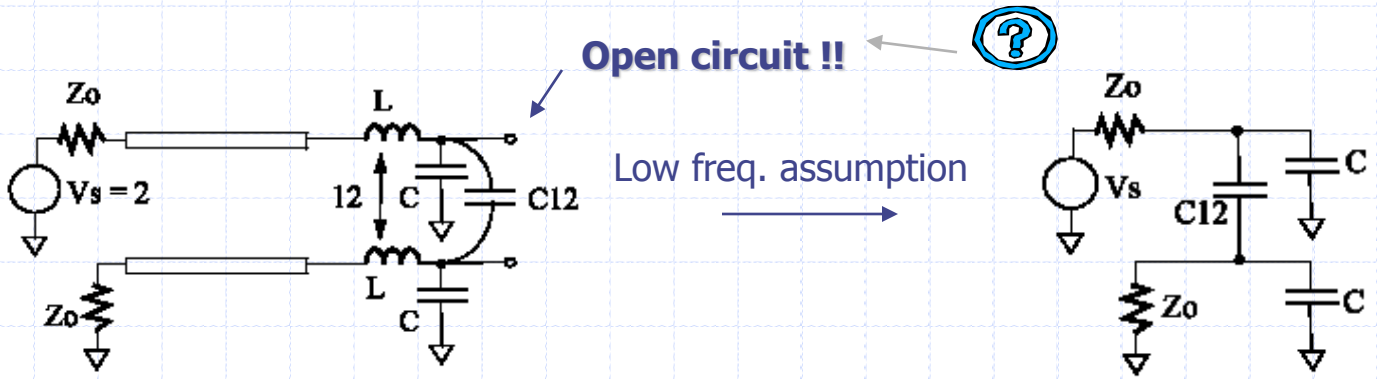


$$S12 \sim 2\,Zo\,j\,\omega\,C12 / (1 + 2\,Zo\,j\,\omega\,C12)$$

$$\sim 2\,Zo\,j\,\omega\,C12.$$

$$Cm = 1.59 \times 10^{-3}\,|S_{12}| / f$$

**The slope of $S_{21}(f)$ at low frequency is taking to compute the Cm**

# Measurement of coupling coefficient (Frequency domain) : (example) RAMBUS RIMM Connector

- Theory (mutual inductance)

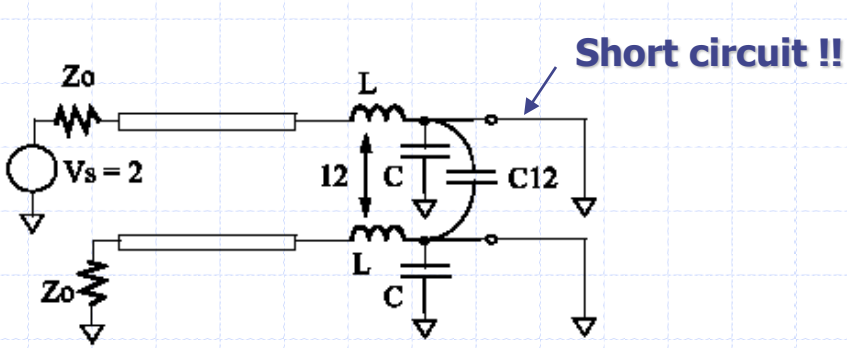


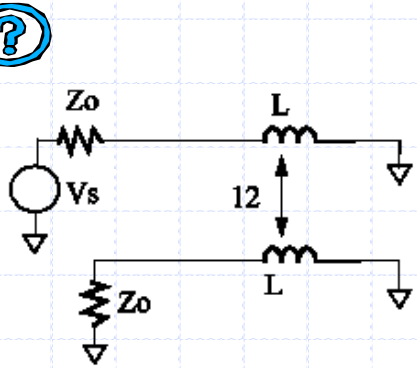


$$S12 \sim 2 \quad 12\, L\, j\, \omega / (Zo + j\, \omega\, L)$$

$$\sim 2 \quad 12\, L\, j\, \omega / Zo.$$

$$\rightarrow \quad m = 3.98\, |S_{12}| / (f * L)$$

**The slope of $S_{21}(f)$ at low frequency is taking to compute the Lm**

# Measurement of coupling coefficient (Frequency domain) : (example) RAMBUS RIMM Connector

- Measurement setup

Figure A-12: Measure the Rambus DUT Board Parasitics

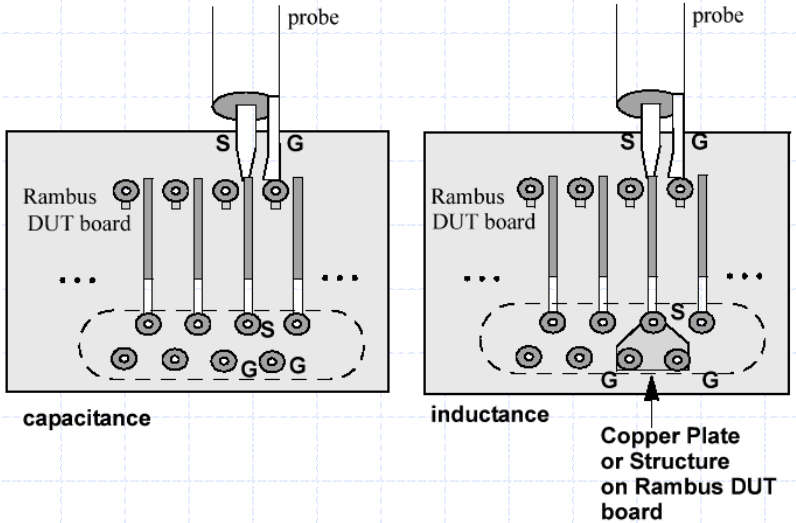


Figure A-13: Measure Mutual Capacitance

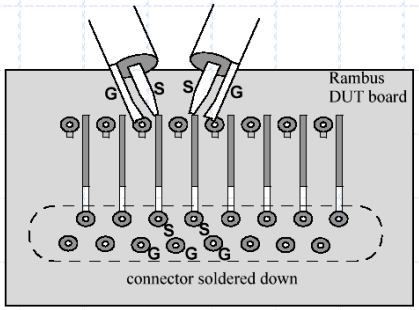

## Differential Impedance Measurement by TDR/TDT

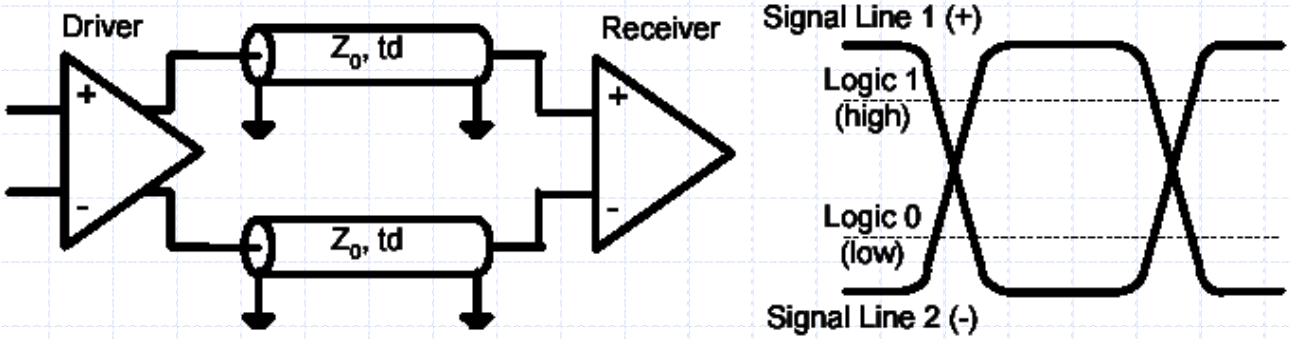


They have good EMS (Immunity) and EMI (Interference) Performance.

## Differential Impedance Measurement by TDR/TDT

Equivalent circuits of the differential interconnects: (Type I)

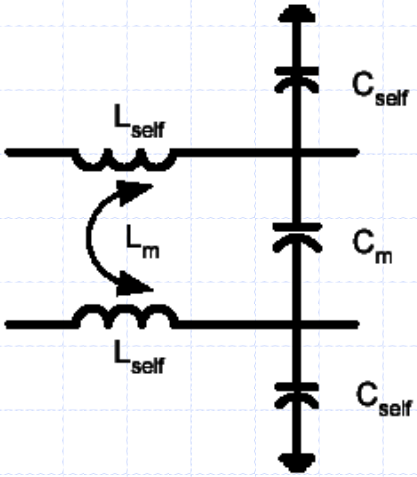


**Figure 2. An electrically short section of a differential transmission line pair**

$$C = \begin{bmatrix} C_{tot} & -C_m \\ -C_m & C_{tot} \end{bmatrix} \quad L = \begin{bmatrix} L_{self} & L_m \\ L_m & L_{self} \end{bmatrix}$$

## Differential Impedance Measurement by TDR/TDT

Equivalent circuits of the differential interconnects: (Type II)

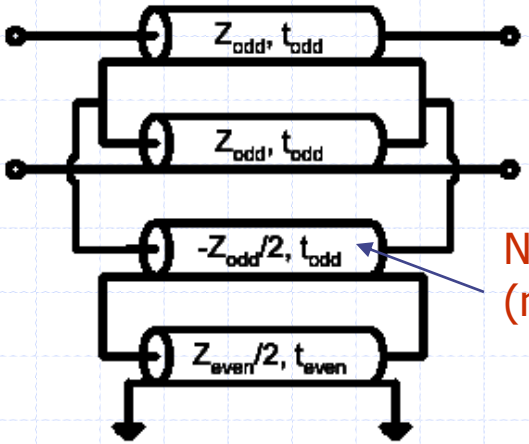


Negative impedance (not practical)

**Figure 4. Differential pair model based on the even and odd impedance and delay values**

$$Z_{odd} = \sqrt{\frac{L_{self} - L_m}{C_{tot} + C_m}}$$

$$Z_{even} = \sqrt{\frac{L_{self} + L_m}{C_{tot} - C_m}}$$

$$t_{odd} = \sqrt{(L_{self} - L_m)(C_{tot} + C_m)}$$

$$t_{even} = \sqrt{(L_{self} + L_m)(C_{tot} - C_m)}$$

Advantage is it is a <u>rigorous</u> equivalent circuit.
Disadvantage is only valid in three conductor interconnects.

## Differential Impedance Measurement by TDR/TDT

Equivalent circuits of the differential interconnects: (Type III)

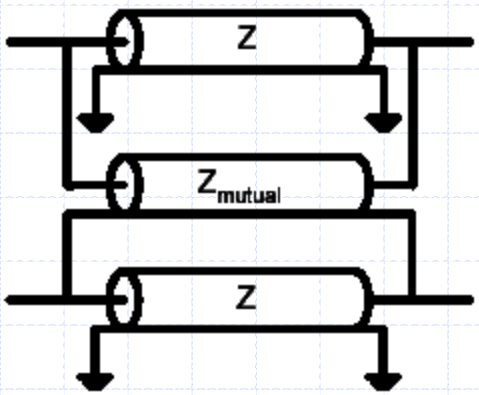


**Figure 5. Simplified differential transmission line model**

$$Z_{mutual} = \frac{2 \cdot Z_{odd} \cdot Z_{even}}{Z_{even} - Z_{odd}}$$

$$Z = Z_{even}$$

$$t_{odd} = t_{even}$$

# Differential Impedance Measurement by TDR/TDT

## Measurement Principle

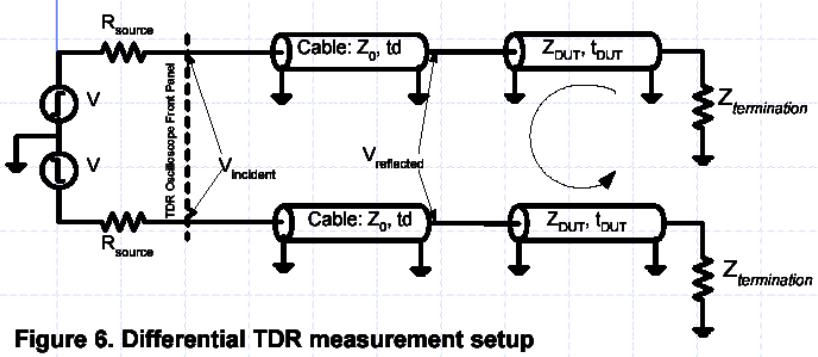


**Figure 6. Differential TDR measurement setup**

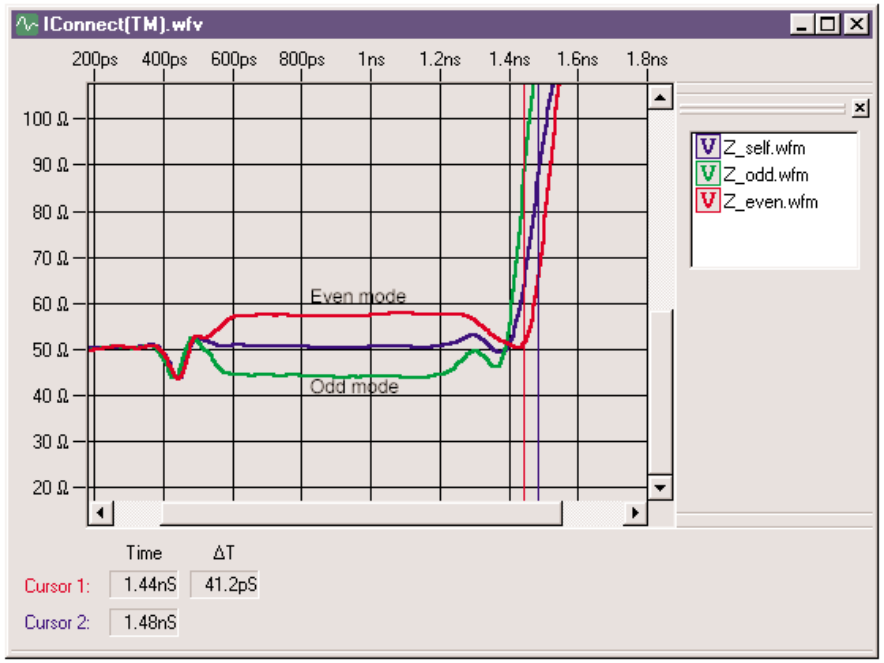


**Figure 3. Even and odd mode impedance profiles displayed in the IConnect software waveform viewer. Both even and odd mode impedances and delays are clearly different**

# Differential Impedance Measurement by TDR/TDT

Comparison of the equivalent model by the SPICE

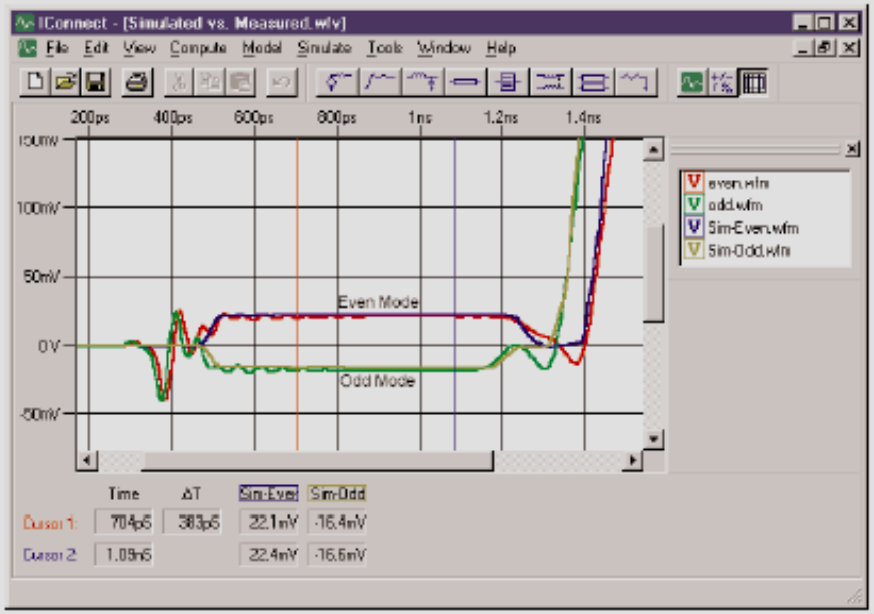


**Figure 8. Verifying the differential line model in IConnect software. Simulations with both even and odd mode stimuli are performed using an integrated interface to a SPICE simulator and the simulation results are compared to the measurement data**

## A Final Question:

Can you explain why

$$Z_{differential} = 2 \cdot Z_{odd}$$

$$Z_{common} = Z_{even}/2$$

# How to reduce crosstalk noise

- Space out signal routing
- Route-void channels adjacent to critical nets
- Increase coupling to ground
- Run orthogonal rather than parallel
- Provide the homogeneous medium
- Using the slowest risetime and falling time

# §10.1 Three conductor lines and crosstalk

- **Time Domain Crosstalk VS Frequency-domain Crosstalk**

a. Two conductors transmission lines has no crosstalk problem. In order to have crosstalk, we need to have three or more conductors.

b.

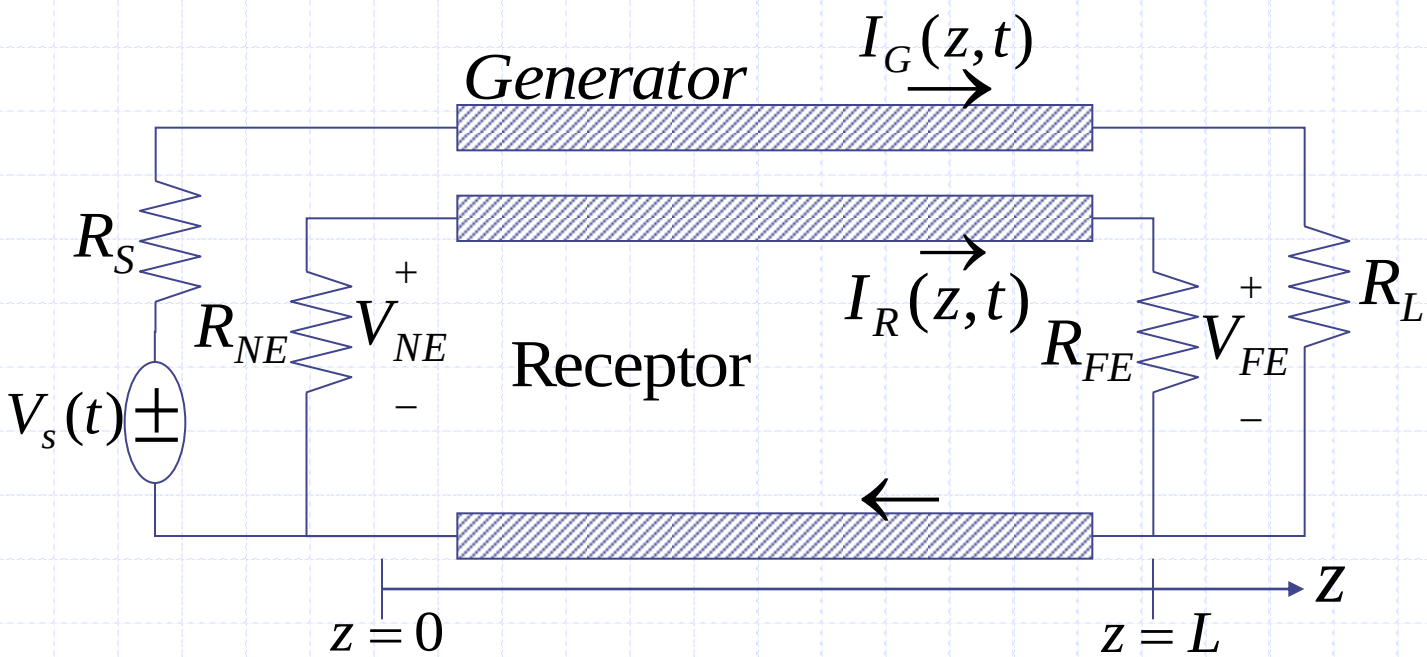

c. The generator circuit consists of the generator conductor and reference conductor and has current $I_G(z,t)$ along the conductors and voltage $V_G(z,t)$ between them. The $I_G$ and $V_G$ will generate EM fields and interact with the receptor circuit.

d. The objective in a crosstalk analysis is to determine the near-end voltage $V_{NE}(t)$ and far-end voltage $V_{FE}(t)$ given the cross-sectional dimension and the termination characteristics $V_S(t)$, $R_S$, $R_L$, $R_{NE}$, $R_{FE}$.

## e. Two type of crosstalk analysis

(1) Time-domain crosstalk：

$$predict\ V_{FE}(t)\ and\ V_{NE}(t)\ given\ V_S(t).$$

(2) Frequency-domain crosstalk：

$$predict\ \hat{V}_{FE}(jw)\ and\ \hat{V}_{NE}(jw)\ given\ V_S(t) = V_S\cos(wt+\phi).$$

f. (1) For simplicity, we will assume that the medium surrounding the conductors for these configurations is homogeneous.

(2) Closed-form expressions for the per-unit-length parameters for the lines in inhomogeneous medium, such as microstrip lines, are difficult to determine.

# Transmission Line Equations

- a. Assume only TEM mode present on the materials, so line voltages $V_G(z,t)$ and $V_R(z,t)$, as well as line currents $I_G(z,t)$ and $I_R(z,t)$ can be uniquely defined.
- b. Equivalent circuit of TEM-mode on 3-conductor material :

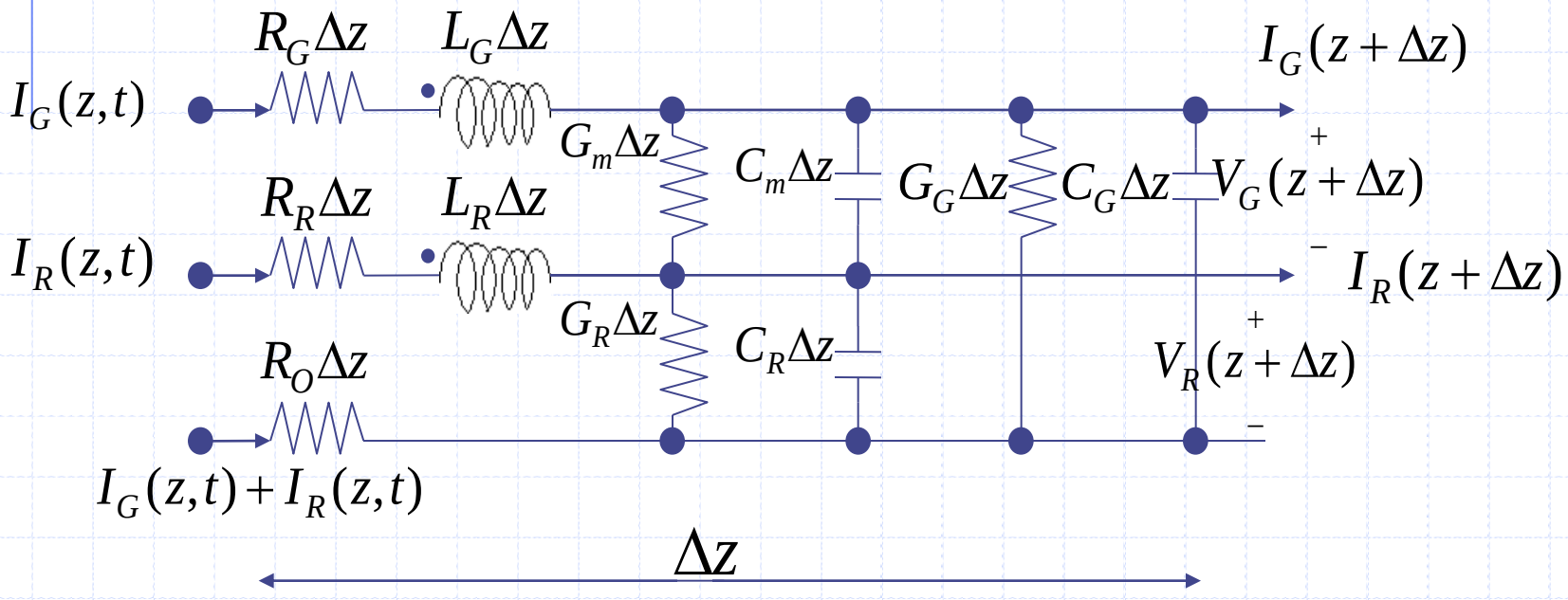

$$
\begin{cases}
\dfrac{\partial V_G(z,t)}{\partial z} = -(R_G + R_O) I_G(z,t) - R_O I_R(z,t) - L_G \dfrac{\partial I_G(z,t)}{\partial t} - L_m \dfrac{\partial I_R(z,t)}{\partial t} \\
\dfrac{\partial V_R(z,t)}{\partial z} = -R_O I_G(z,t) - (R_R + R_O) I_R(z,t) - L_m \dfrac{\partial I_G(z,t)}{\partial t} - L_R \dfrac{\partial I_R(z,t)}{\partial t} \\
\dfrac{\partial I_G(z,t)}{\partial z} = -(G_G + G_m) V_G(z,t) + G_m V_R(z,t) - (C_G + C_m) \dfrac{\partial V_G(z,t)}{\partial t} + C_m \dfrac{\partial V_R(z,t)}{\partial t} \\
\dfrac{\partial I_R(z,t)}{\partial z} = G_m V_G(z,t) - (G_R + G_m) V_R(z,t) + C_m \dfrac{\partial V_G(z,t)}{\partial t} - (C_R + C_m) \dfrac{\partial V_R(z,t)}{\partial t}
\end{cases}
$$

In matrix terms :

$$
\Rightarrow \frac{\partial [\mathbf{V}(z,t)]}{\partial z} = -\mathbf{R}\mathbf{I}(z,t) - \mathbf{L} \frac{\partial \mathbf{I}(z,t)}{\partial t}
$$

$$
\Rightarrow \frac{\partial [\mathbf{I}(z,t)]}{\partial z} = -\mathbf{G}\mathbf{V}(z,t) - \mathbf{C} \frac{\partial \mathbf{V}(z,t)}{\partial t}
$$

*where*

$$\begin{cases} \mathbf{V}(z,t)=\begin{bmatrix} V_G(z,t) \\ V_R(z,t) \end{bmatrix}, \mathbf{I}(z,t)=\begin{bmatrix} I_G(z,t) \\ I_R(z,t) \end{bmatrix}, \mathbf{R}=\begin{bmatrix} R_G+R_O & R_O \\ R_O & R_R+R_O \end{bmatrix} \\ \mathbf{L}=\begin{bmatrix} L_G & L_m \\ L_m & L_R \end{bmatrix}, \mathbf{G}=\begin{bmatrix} G_G+G_m & G_m \\ -G_m & G_R+G_m \end{bmatrix}, \mathbf{C}=\begin{bmatrix} C_G+C_m & -C_m \\ -C_m & C_R+C_m \end{bmatrix} \end{cases}$$

c. Solutions

(1)In time domain, it is a difficult problem.

When **R**=**G**=0 (lossless lines), there are exact solutions in *SPICE*.

(2)In frequency domain, the exact solutions for above material equations are possible, we will show the exact solution for lossless case.

Note: In frequency domain, the equations =>

$$\begin{cases} \dfrac{d\hat{\mathbf{V}}(z)}{dz} = -\hat{\mathbf{Z}}\hat{\mathbf{I}}(z) \\ \dfrac{d\hat{\mathbf{I}}(z)}{dz} = -\hat{\mathbf{Y}}\hat{\mathbf{V}}(z) \end{cases}$$

$$where \begin{cases} \hat{\mathbf{Z}} = \mathbf{R} + \mathrm{jw}\mathbf{L} \\ \hat{\mathbf{Y}} = \mathbf{G} + \mathrm{jw}\mathbf{C} \end{cases}$$

$$\begin{cases} \mathbf{V}(z,t) = \mathrm{Re}\left\{\hat{\mathbf{V}}(z)e^{jwt}\right\} \\ \mathbf{I}(z,t) = \mathrm{Re}\left\{\hat{\mathbf{I}}(z)e^{jwt}\right\} \end{cases}$$

# § 10.3.1 The per-unit-length parameters

- Internal parameters : $R_G$, $R_R$, $R_O$ and internal inductance are not dependent on the line configurations.

a. For material in homogeneous medium (μ,ε)

(1)

$$\mathbf{LC} = \mathbf{CL} = \mu\varepsilon\mathbf{1} \;\Rightarrow\; \mathbf{C} = \mu\varepsilon\,\mathbf{L}^{-1} = \frac{1}{v^2}\,\mathbf{L}^{-1}$$

Example : Three-conductor line

$$\begin{bmatrix} C_G + C_m & -C_m \\ -C_m & C_R + C_m \end{bmatrix} = \frac{1}{v^2(L_G L_R - L_m{}^2)} \begin{bmatrix} L_R & -L_m \\ -L_m & L_G \end{bmatrix}$$

$$\Rightarrow \begin{cases} C_m = \dfrac{L_m}{v^2(L_G L_R - L_m{}^2)} \\ C_G + C_m = \dfrac{L_R}{v^2(L_G L_R - L_m{}^2)} \\ C_R + C_m = \dfrac{L_G}{v^2(L_G L_R - L_m{}^2)} \end{cases}$$

(2)

$$\mathbf{LG} = \mathbf{GL} = \mu\sigma\mathbf{1} \;\Rightarrow\; \mathrm{G} = \mu\sigma\,\mathbf{L}^{-1}$$

# § Wide-Separation Approximation for Wires

a. (1) Magnetic flux of a current-carrying wire through a surface

(2) voltage between two points for a charge-carrying wire

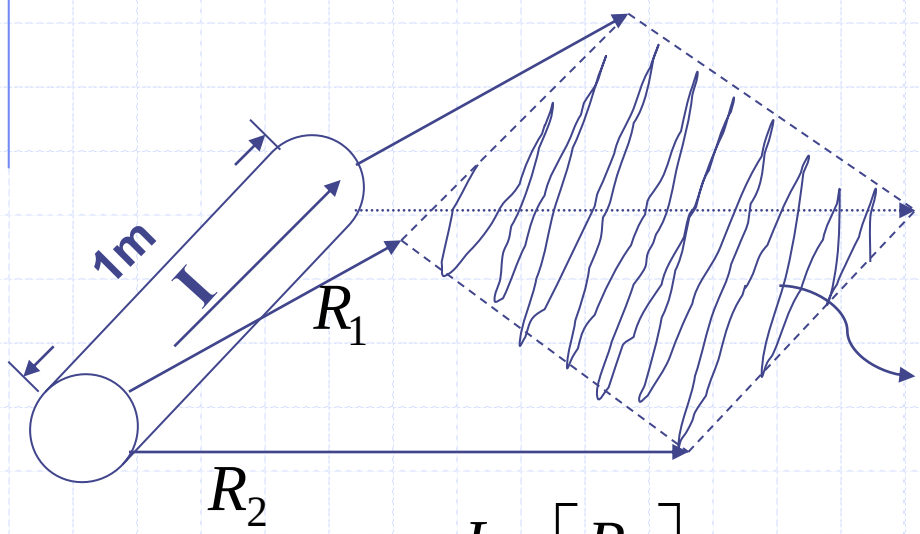


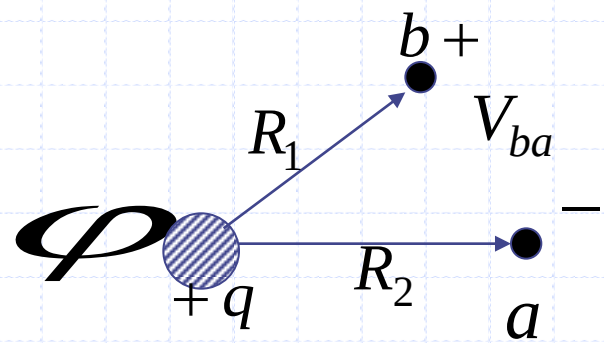


$$\varphi = \frac{\mu_0 I}{2\pi} \ln\left[\frac{R_2}{R_1}\right]$$

$$V_{ba} = \frac{q}{2\pi\varepsilon_0} \ln \frac{R_2}{R_1}$$

b. Parameters of three-conductor transmission lines

(1) Inductance :

$$\varphi = \mathbf{LI} \Rightarrow \begin{bmatrix} \varphi_G \\ \varphi_R \end{bmatrix} = \begin{bmatrix} L_G & L_m \\ L_m & L_R \end{bmatrix} \begin{bmatrix} I_G \\ I_R \end{bmatrix}$$

$$\therefore L_G = \left.\frac{\varphi_G}{I_G}\right|_{I_R = o} \quad , \quad L_R = \left.\frac{\varphi_R}{I_R}\right|_{I_G = 0}$$

$$L_m = \left.\frac{\varphi_G}{I_R}\right|_{I_G = 0} = \left.\frac{\varphi_R}{I_G}\right|_{I_R = 0}$$

1.

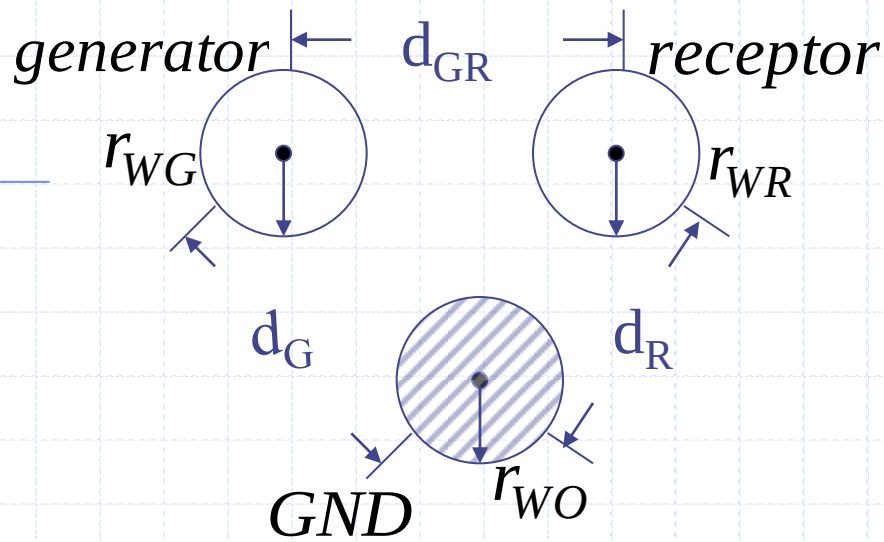


2. Self inductance

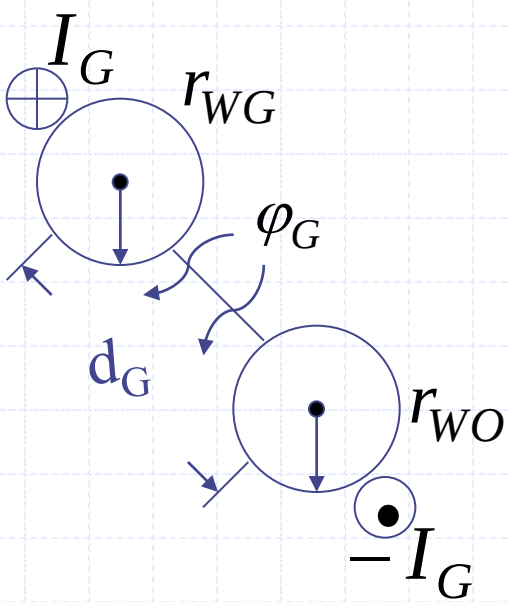


$$L_G = \frac{\mu_0}{2\pi}\ln\left(\frac{d_G}{r_{WG}}\right) + \frac{\mu_0}{2\pi}\ln\left(\frac{d_G}{r_{WO}}\right) = \frac{\mu_0}{2\pi}\ln\left(\frac{d_G^{\,2}}{r_{WG}r_{WO}}\right)$$

$$L_R = \frac{\mu_0}{2\pi}\ln\left(\frac{d_R^{\,2}}{r_{WR}r_{WO}}\right)$$

## 3. Mutual inductance

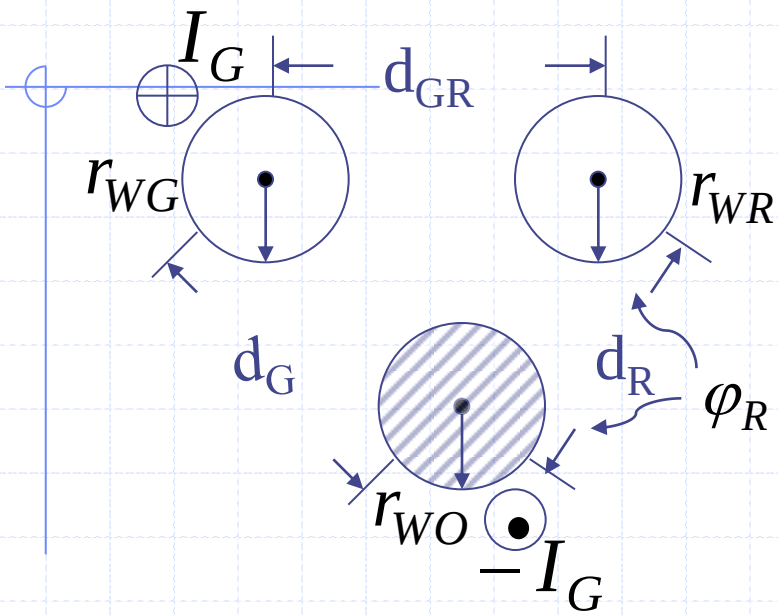


$$L_m = \frac{\mu_0}{2\pi}\ln\left(\frac{d_G}{d_{GR}}\right) + \frac{\mu_0}{2\pi}\ln\left(\frac{d_R}{r_{WO}}\right)$$

$$= \frac{\mu_0}{2\pi}\ln\left(\frac{d_G d_R}{d_{GR} r_{WO}}\right)$$

## (2) Capacitance

$$\mathbf{q} = \mathbf{C}\mathbf{V} = \begin{bmatrix} C_G & -C_m \\ -C_m & C_R + C_m \end{bmatrix} \begin{bmatrix} V_G \\ V_R \end{bmatrix}$$

$$\mathbf{V} = \mathbf{C}^{-1}\mathbf{q} = \mathbf{p}\mathbf{q} = \begin{bmatrix} P_G & p_m \\ p_m & p_R \end{bmatrix} \begin{bmatrix} q_G \\ q_R \end{bmatrix}$$

$$\therefore P_G = \left.\frac{V_G}{q_G}\right|_{q_R=0} \quad , \quad P_R = \left.\frac{V_R}{q_R}\right|_{q_R=0} \quad , \quad P_m = \left.\frac{V_R}{q_G}\right|_{q_R=0} = \left.\frac{V_G}{q_R}\right|_{q_G=0}$$

## 1. Self capacitance

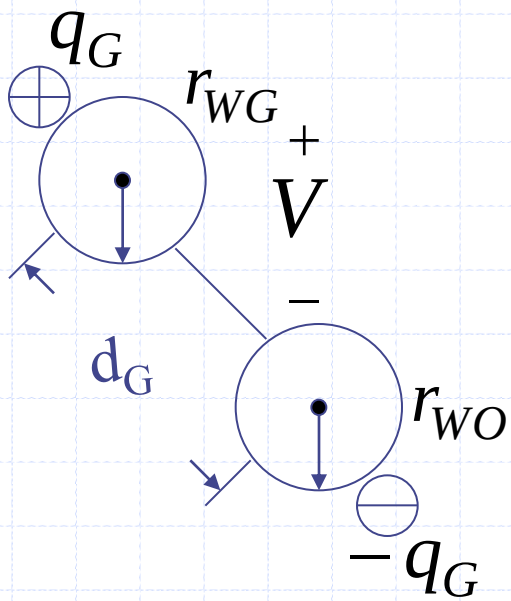


$$P_G = \frac{1}{2\pi\varepsilon_0}\ln\left(\frac{d_G}{r_{WG}}\right) + \frac{1}{2\pi\varepsilon_0}\ln\left(\frac{d_G}{r_{WO}}\right)$$

$$= \frac{1}{2\pi\varepsilon_0}\ln\left(\frac{d_G{}^2}{r_{WG}r_{WO}}\right)$$

## 2. Mutual capacitance

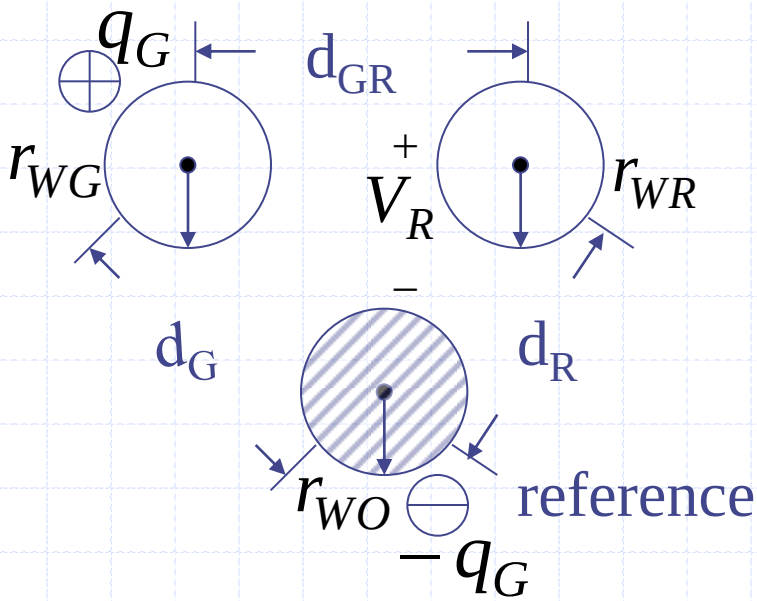


$$P_m = \frac{1}{2\pi\varepsilon_0}\ln\left(\frac{d_G}{d_{GR}}\right) + \frac{1}{2\pi\varepsilon_0}\ln\left(\frac{d_R}{r_{WO}}\right)$$

$$= \frac{1}{2\pi\varepsilon_0}\ln\left(\frac{d_G d_R}{d_{GR} r_{WO}}\right)$$

## c. Example

$$L_G = \left.\frac{\varphi_G}{I_G}\right|_{I_R=0}$$

$$= \frac{\mu_0}{2\pi}\ln\left(\frac{h_G}{r_{WG}}\right) + \frac{\mu_0}{2\pi}\ln\left(\frac{2h_G}{h_G}\right)$$

$$= \frac{\mu_0}{2\pi}\ln\left(\frac{2h_G}{r_{WG}}\right)$$

$$L_m = \left.\frac{\varphi_R}{I_G}\right|_{I_R=0}$$

$$= \frac{\mu_0}{2\pi}\ln\left(\frac{S_1}{S}\right) + \frac{\mu_0}{2\pi}\ln\left(\frac{S_2}{S_3}\right) \; ; (S_1 = S_3)$$

$$= \frac{\mu_0}{2\pi}\ln\left(\frac{S_2}{S}\right) = \frac{\mu_0}{4\pi}\ln\left(1 + 4\frac{h_G h_R}{S^2}\right)$$

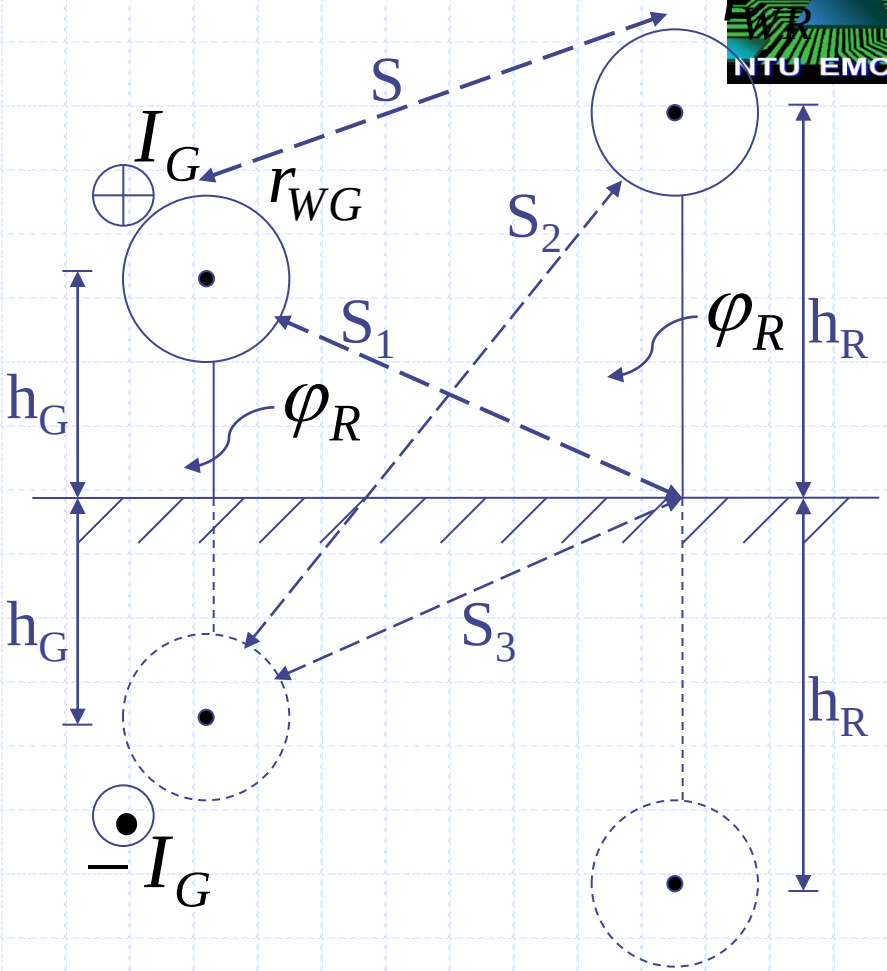

# §10.1.4 Frequency-Domain (Steady State) Crosstalk

§ General Solution :

a.

$$\frac{d\hat{\mathbf{V}}(z)}{dz} = -\hat{\mathbf{Z}}\hat{\mathbf{I}}(z) \qquad \hat{\mathbf{V}}(z) = \begin{bmatrix} \hat{V}_G(z) \\ \hat{V}_R(z) \end{bmatrix}, \ \hat{\mathbf{I}}(z) = \begin{bmatrix} \hat{I}_G(z) \\ \hat{I}_R(z) \end{bmatrix}$$

$$\frac{d\hat{\mathbf{I}}(z)}{dz} = -\hat{\mathbf{Y}}\hat{\mathbf{V}}(z)$$

$$where\ \hat{\mathbf{Z}} = \mathbf{R} + jw\mathbf{L}, \ \hat{\mathbf{Y}} = \mathbf{G} + jw\mathbf{C}$$

b.

$$\Rightarrow \begin{cases} \dfrac{d^2\hat{\mathbf{V}}(z)}{dz^2} = \mathbf{ZYV}(z) \\ \dfrac{d^2\hat{\mathbf{I}}(z)}{dz^2} = \mathbf{YZI}(z) \end{cases} \qquad Note: in\ general, \mathbf{ZY} \neq \mathbf{YZ}$$

(1) *if we can find a transformation matrix* $\hat{\mathbf{T}}$ *such that:*

$$\hat{\mathbf{T}}^{-1}\hat{\mathbf{Y}}\hat{\mathbf{Z}}\hat{\mathbf{T}} = \hat{\mathbf{r}}^2 = \begin{bmatrix} \hat{r}_G{}^2 & 0 \\ 0 & \hat{r}_R{}^2 \end{bmatrix} \leftarrow \textit{diagonalized}$$

*where* $\hat{\mathbf{T}}$ *is the eigenvectors of* $\hat{\mathbf{Y}}\hat{\mathbf{Z}}$

$\hat{\mathbf{r}}$ *is the eigenvalues of* $\hat{\mathbf{Y}}\hat{\mathbf{Z}}$

(2) $$\frac{d^2}{dz^2}\hat{\mathbf{T}}^{-1}\hat{\mathbf{I}}(z) = \hat{\mathbf{T}}^{-1}\hat{\mathbf{Y}}\hat{\mathbf{Z}}\hat{\mathbf{I}}(z)$$

$$\textit{let } \hat{\mathbf{T}}^{-1}\hat{\mathbf{I}}(z) = \hat{\mathbf{I}}_m(z) \leftarrow \textit{modal current} = \begin{bmatrix} \hat{I}_{mG}(z) \\ \hat{I}_{mR}(z) \end{bmatrix}$$

$$\Rightarrow \frac{d^2}{dz^2}\hat{\mathbf{I}}_m(z) = \hat{\mathbf{T}}^{-1}\hat{\mathbf{Y}}\hat{\mathbf{Z}}\hat{\mathbf{T}}\hat{\mathbf{I}}_m(z)$$

$$= \begin{bmatrix} \hat{r}_G{}^2 & 0 \\ 0 & \hat{r}_R{}^2 \end{bmatrix} \begin{bmatrix} \hat{I}_{mG}(z) \\ \hat{I}_{mR}(z) \end{bmatrix}$$

$$\begin{cases} \hat{I}_{mG}{}''(z) = \hat{r}_G{}^2 \hat{I}_{mG}(z) \\ \hat{I}_{mR}{}''(z) = \hat{r}_R{}^2 \hat{I}_{mR}(z) \end{cases} \Rightarrow \begin{cases} \hat{I}_{mG}(z) = e^{-\hat{r}_G z}\hat{I}_{mG}(z)^+ - e^{\hat{r}_G z}\hat{I}_{mG}(z)^- \\ \hat{I}_{mR}(z) = e^{-\hat{r}_R z}\hat{I}_{mR}(z)^+ - e^{\hat{r}_R z}\hat{I}_{mR}(z)^- \end{cases}$$

(3) $\hat{\mathbf{I}}_m(z) = \mathbf{e}^{-\hat{r}z}\hat{\mathbf{I}}_m{}^{+} - \mathbf{e}^{\hat{r}z}\hat{\mathbf{I}}_m{}^{-}$ *in matrix form.*

$$where\ \mathbf{e}^{\pm\hat{r}z} = \begin{bmatrix} e^{\pm\hat{r}_G z} & 0 \\ 0 & e^{\pm\hat{r}_G z} \end{bmatrix},\ \hat{\mathbf{I}}_m{}^{\pm} = \begin{bmatrix} \hat{I}_{mG}{}^{\pm} \\ \hat{I}_{mR}{}^{\pm} \end{bmatrix}$$

c.

$$\hat{\mathbf{I}}(z) = \hat{\mathbf{T}}\hat{\mathbf{I}}_m(z) = \hat{\mathbf{T}}(\mathbf{e}^{-rz}\hat{\mathbf{I}}_m{}^{+} - \mathbf{e}^{rz}\hat{\mathbf{I}}_m{}^{-})$$

$$\hat{\mathbf{V}}(z) = -\hat{\mathbf{Y}}^{-1}\frac{d}{dz}\hat{\mathbf{I}}(z) = \hat{\mathbf{Y}}^{-1}\hat{\mathbf{T}}\hat{\mathbf{r}}(\mathbf{e}^{-\hat{r}z}\hat{\mathbf{I}}_m{}^{+} + \mathbf{e}^{\hat{r}z}\hat{\mathbf{I}}_m{}^{-})$$

$$by\ \hat{\mathbf{T}}^{-1}\hat{\mathbf{Y}}\hat{\mathbf{Z}}\hat{\mathbf{T}} = \hat{\mathbf{r}}^2 \Rightarrow \hat{\mathbf{Z}}\hat{\mathbf{T}}\hat{\mathbf{r}}^{-1} = \hat{\mathbf{Y}}^{-1}\hat{\mathbf{T}}\hat{\mathbf{r}}$$

$$\therefore \hat{\mathbf{V}}(z) = \left(\hat{\mathbf{Z}}\hat{\mathbf{T}}\hat{\mathbf{r}}^{-1}\hat{\mathbf{T}}^{-1}\right)\hat{\mathbf{T}}(\mathbf{e}^{-\hat{r}z}\hat{\mathbf{I}}_m{}^{+} + \mathbf{e}^{\hat{r}z}\hat{\mathbf{I}}_m{}^{-})$$

d.

$$\hat{\mathbf{Z}}_c \equiv \hat{\mathbf{Z}}\left(\hat{\mathbf{T}}\hat{\mathbf{r}}^{-1}\hat{\mathbf{T}}^{-1}\right) = \hat{\mathbf{Z}}(\sqrt{\hat{\mathbf{Y}}\hat{\mathbf{Z}}})^{-1}$$

$$= \hat{\mathbf{Y}}^{-1}\sqrt{\hat{\mathbf{Y}}\hat{\mathbf{Z}}}\quad see\ below\ for\ detail$$

$$\text{上式的}\left(\hat{\mathbf{T}}\hat{\mathbf{r}}^{-1}\hat{\mathbf{T}}^{-1}\right)=\left(\sqrt{\hat{\mathbf{Y}}\hat{\mathbf{Z}}}\right)^{-1}$$

$$\because\ \hat{\mathbf{T}}^{-1}\hat{\mathbf{Y}}\hat{\mathbf{Z}}\hat{\mathbf{T}}=\hat{\mathbf{r}}^{2}\ \Rightarrow \hat{\mathbf{r}}^{-1}\hat{\mathbf{T}}^{-1}\hat{\mathbf{Y}}\hat{\mathbf{Z}}\hat{\mathbf{T}}\hat{\mathbf{r}}^{-1}=\mathbf{1}$$

$$\Rightarrow\left(\hat{\mathbf{T}}\hat{\mathbf{r}}^{-1}\hat{\mathbf{T}}^{-1}\right)\hat{\mathbf{Y}}\hat{\mathbf{Z}}\left(\hat{\mathbf{T}}\hat{\mathbf{r}}^{-1}\hat{\mathbf{T}}^{-1}\right)=\mathbf{1}$$

$$\Rightarrow\hat{\mathbf{Y}}\hat{\mathbf{Z}}=\left(\hat{\mathbf{T}}\hat{\mathbf{r}}^{-1}\hat{\mathbf{T}}^{-1}\right)^{-2}$$

$$\Rightarrow\hat{\mathbf{T}}\hat{\mathbf{r}}^{-1}\hat{\mathbf{T}}^{-1}=\left(\sqrt{\hat{\mathbf{Y}}\hat{\mathbf{Z}}}\right)^{-1}$$

*similar to the scalar results*

$$\hat{Z}=\sqrt{\frac{\hat{Z}}{\hat{y}}}=\hat{Z}(\sqrt{\hat{Y}\hat{Z}})^{-1}$$

e. Solving the four unknowns $\mathbf{I}_m^+$ and $\mathbf{I}_m^-$ by the termination condition

$$(1)\begin{cases}\mathbf{V}(0)=\mathbf{V}_S-\mathbf{Z}_S\mathbf{I}(0)\\ \mathbf{V}(L)=\mathbf{Z}_L\mathbf{I}(L)\end{cases}$$

$$\textit{where}\ \mathbf{V}_S=\begin{bmatrix}V_S\\0\end{bmatrix},\ \mathbf{Z}_S=\begin{bmatrix}R_S & 0\\0 & R_{NE}\end{bmatrix},\ \mathbf{Z}_L=\begin{bmatrix}R_L & 0\\0 & R_{FE}\end{bmatrix}$$

(2) $\because$ *at* $z=0$

$$\hat{\mathbf{V}}(0)=\hat{\mathbf{Z}}_C\hat{\mathbf{T}}(\hat{\mathbf{I}}_{\mathrm{m}}{}^{+}+\hat{\mathbf{I}}_{\mathrm{m}}{}^{-})$$

$$\hat{\mathbf{I}}(0)=\hat{\mathbf{T}}(\hat{\mathbf{I}}_{\mathrm{m}}{}^{+}-\hat{\mathbf{I}}_{\mathrm{m}}{}^{-})$$

$$\therefore \hat{\mathbf{Z}}_C\hat{\mathbf{T}}(\hat{\mathbf{I}}_{\mathrm{m}}{}^{+}+\hat{\mathbf{I}}_{\mathrm{m}}{}^{-})=\hat{\mathbf{V}}_S-\hat{\mathbf{Z}}_S\hat{\mathbf{T}}(\hat{\mathbf{I}}_{\mathrm{m}}{}^{+}-\hat{\mathbf{I}}_{\mathrm{m}}{}^{-})$$

$\because$ *at* $z=L$

$$\hat{\mathbf{V}}(L)=\hat{\mathbf{Z}}_C\hat{\mathbf{T}}(e^{-\hat{r}L}\hat{\mathbf{I}}_{\mathrm{m}}{}^{+}+e^{\hat{r}L}\hat{\mathbf{I}}_{\mathrm{m}}{}^{-})$$

$$\hat{\mathbf{I}}(L)=\hat{\mathbf{T}}(e^{-\hat{r}L}\hat{\mathbf{I}}_{\mathrm{m}}{}^{+}-e^{\hat{r}L}\hat{\mathbf{I}}_{\mathrm{m}}{}^{-})$$

$$\therefore \hat{\mathbf{Z}}_C\hat{\mathbf{T}}(e^{-\hat{r}L}\hat{\mathbf{I}}_{\mathrm{m}}{}^{+}+e^{\hat{r}L}\hat{\mathbf{I}}_{\mathrm{m}}{}^{-})=\hat{\mathbf{Z}}_L\hat{\mathbf{T}}(e^{-\hat{r}L}\hat{\mathbf{I}}_{\mathrm{m}}{}^{+}-e^{\hat{r}L}\hat{\mathbf{I}}_{\mathrm{m}}{}^{-})$$

$$\Rightarrow\begin{bmatrix}\left(\hat{\mathbf{Z}}_C+\hat{\mathbf{Z}}_S\right)\hat{\mathbf{T}} & \left(\hat{\mathbf{Z}}_C-\hat{\mathbf{Z}}_S\right)\hat{\mathbf{T}}\\ \left(\hat{\mathbf{Z}}_C-\hat{\mathbf{Z}}_L\right)\hat{\mathbf{T}}e^{-\hat{r}L} & \left(\hat{\mathbf{Z}}_C+\hat{\mathbf{Z}}_L\right)\hat{\mathbf{T}}e^{\hat{r}L}\end{bmatrix}\begin{bmatrix}\hat{\mathbf{I}}_{\mathrm{m}}{}^{+}\\ \hat{\mathbf{I}}_{\mathrm{m}}{}^{-}\end{bmatrix}=\begin{bmatrix}\hat{\mathbf{V}}_S\\ 0\end{bmatrix}$$

$\rightarrow \hat{\mathbf{I}}_{\mathrm{m}}{}^{+},\ \hat{\mathbf{I}}_{\mathrm{m}}{}^{-},\ \hat{\mathbf{I}}_{\mathrm{m}}{}^{+}$ *and* $\hat{\mathbf{I}}_{\mathrm{m}}{}^{-}$ *can be solved.*

## § Exact Solution for Lossless Lines in Homogeneous Media

a. for lossless line :

$$\mathbf{R} = \mathbf{G} = 0 \; and \; \hat{\mathbf{Z}} = jw\mathbf{L}, \; \hat{\mathbf{Y}} = jw\mathbf{C}$$

$$\therefore \hat{\mathbf{Y}}\hat{\mathbf{Z}} = -w^2\mathbf{LC} = -w^2\mu\varepsilon\mathbf{1} = -\beta^2\mathbf{1} \leftarrow \; diagonal \; matrix$$

$$where \; \mathbf{LC} = \mu\varepsilon\mathbf{1} \; for \; \text{hom}ogeneous \; transmission \; lines.$$

$$\therefore \hat{\mathbf{T}} = \mathbf{1}, \; \hat{\mathbf{r}} = j\beta\mathbf{1} = j\frac{w}{v}\mathbf{1}$$

b. It can be shown that :

$$\hat{V}_R(0) = \hat{V}_{NE} = \left[ \frac{S}{D_{en}} \frac{R_{NE}}{R_{NE} + R_{FE}} jwL_m L \left( C + \frac{j2\pi L/\lambda}{\sqrt{1-k^2}} \alpha_{LG} S \right) \hat{I}_{GDC} \right.$$

$$\left. + \frac{R_{NE}R_{FE}}{R_{NE} + R_{FE}} jwC_m L \left( C + \frac{j2\pi L/\lambda}{\sqrt{1-k^2}} \frac{1}{\alpha_{LG}} S \right) \hat{V}_{GDC} \right]$$

$$\hat{V}_R(L) = \hat{V}_{FE} = \frac{S}{D_{en}} \left[ -\frac{R_{FE}}{R_{NE} + R_{FE}} jwL_m L\hat{I}_{GDC} + \frac{R_{NE}R_{FE}}{R_{NE} + R_{FE}} jwC_m L\hat{V}_{GDC} \right]$$

$$where:$$

$$D_{en} = C^2 - S^2 w^2 \tau_G \tau_R \left[ 1 - k^2 \frac{(1-\alpha_{SG}\alpha_{LR})(1-\alpha_{LG}\alpha_{SR})}{(1+\alpha_{SR}\alpha_{LR})(1+\alpha_{SG}\alpha_{LG})} \right] + jwCS(\tau_G + \tau_R)$$

$$C = \cos(\beta L),\ S = \frac{\sin(\beta L)}{\beta L}$$

$$k(coupling\ coefficient) = \frac{L_m}{\sqrt{L_G L_R}} = \frac{C_m}{\sqrt{(C_G + C_m)(C_R + C_m)}},\ k \le 1$$

$$\tau_G(time\ constant) = \frac{L_G L}{R_S + R_L} + (C_G + C_m) L \frac{R_S R_L}{R_S + R_L}$$

$$\tau_R(time\ constant) = \frac{L_R L}{R_{NE} + R_{FE}} + (C_R + C_m) L \frac{R_{NE} R_{FE}}{R_{NE} + R_{FE}}$$

$$\hat{V}_{GDC} = \frac{R_L}{R_S + R_L}\hat{V}_S, \quad \hat{I}_{GDC} = \frac{\hat{V}_S}{R_S + R_L} \quad \leftarrow \textit{DC excitation at generator circuit}$$

$$\hat{Z}_{CG} = \sqrt{\frac{L_G}{C_G + C_m}} = vL_G\sqrt{1-k^2}$$

$$\hat{Z}_{CR} = \sqrt{\frac{L_R}{C_R + C_m}} = vL_R\sqrt{1-k^2}$$

Characteristic impedances of each circuit in the presence of the other circuit.

$$\alpha_{SG} = \frac{R_S}{Z_{CG}}, \quad \alpha_{LG} = \frac{R_L}{Z_{CG}}, \quad \alpha_{SR} = \frac{R_{NE}}{Z_{CR}}, \quad \alpha_{LR} = \frac{R_{FE}}{Z_{CR}}$$

$$\textit{if} \quad \alpha < 1 \Rightarrow \textit{low impedance load}.$$

$$\alpha > 1 \Rightarrow \textit{high impedance load}.$$

# § Inductive and Capacitive coupling

## a. Two reasonable assumptions

(1) *The line is electrically short. i.e.* $L \ll \lambda$

$$\therefore C = \cos(\beta L) \cong 1, \quad \zeta \cong 1$$

(2) *The generator and receptor circuits are weakly coupled.*

$$\therefore k \ll 1$$

$$\Rightarrow D_{en} \cong (1 + jw\tau_G)(1 + jw\tau_R)$$

*if* $w$ *is small, then* $D_{en} \cong 1$

b.

$$\therefore \hat{V}_{NE} = \frac{R_{NE}}{R_{NE}+R_{FE}} jwL_m L\hat{I}_{GDC} + \frac{R_{NE}R_{FE}}{R_{NE}+R_{FE}} jwC_m L\hat{V}_{GDC}$$

$$\hat{V}_{FE} = -\frac{R_{FE}}{R_{NE}+R_{FE}} jwL_m L\hat{I}_{GDC} + \frac{R_{NE}R_{FE}}{R_{NE}+R_{FE}} jwC_m L\hat{V}_{GDC}$$

(1)

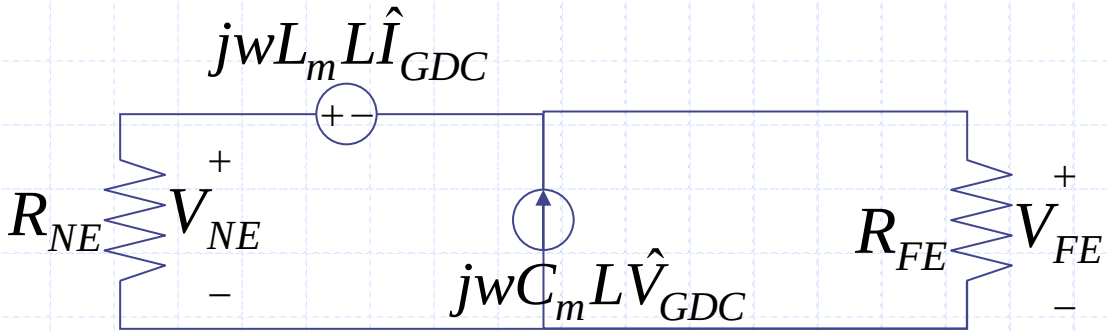


(2)

$$jwL_m L\hat{I}_{GDC} = \Im\left[\frac{d}{dt}(L_m L)\cdot \hat{I}_{GDC}\right] = emf$$

$$jwC_m L\hat{V}_{GDC} = \Im\left[\frac{d}{dt}(C_m L)\cdot \hat{V}_{GDC}\right] = \Im\left[\frac{d}{dt}(CV)\right]$$

*which is the independent current source due to the voltage of generator.*

(3) Crosstalk is the superposition of two components; One is inductive coupling, the other one is capacitive coupling.

c. Intuitively :

(1) When low-impedance load (high current, low voltage), the inductive coupling is dominant.

(2) When high-impedance load (low current, high voltage), the capacitive coupling is dominant.